GLASSFIT

Glass Railing Systems

comenza
Railing Passion

VERSION - SEPTEMBER 2026

comenza

Railing Passion

INNOVATIVE SME

VALID BETWEEN 14/05/2026 AND 13/05/2026

GOBIERNO DE ESPAÑA

MINISTERIO DE CIENCIA E INNOVACIÓN

www.comenza.com

comenza

Railing Passion

Your safety and well-being inspire our railing systems

New passenger building at Santiago de Compostela Station-Daniel Castelao
GlassFit Flow SV-1701 Top and GlassFit Flow SV-1703 Side

Table of contents

Comenza

Comenza — 08

Services — 10

- Safety and regulatory compliance — 10
- Technical Office — 11
- Configurator — 12

Personalized Support — 13

News — 13

Minimal Post — 15

Post railing systems

- Minimal Post MT-200 — 18
- Minimal Post MT-201 — 20

GlassFit Surface — 23

Clamp systems

- GlassFit Surface CC-800 — 26
- GlassFit Surface CC-801 — 28
- GlassFit Surface CC-780 — 30
- GlassFit Surface CC-782 — 32
- GlassFit Surface CC-791 — 34

GlassFit Gravity — 37

Side adapter systems

- GlassFit Gravity CC-775 — 40
- GlassFit Gravity CC-772 — 42

GlassFit Frame — 45

French balcony systems

- GlassFit Frame FB-10 — 48

GlassFit Flow — 51

Profile systems

- GlassFit Flow SV-1401 Top — 58
- GlassFit Flow SV-1402 Side — 60
- GlassFit Flow SV-1403 Top — 62
- GlassFit Flow SV-1404 Side — 64
- GlassFit Flow SV-1501 Top — 66
- GlassFit Flow SV-1602 Side — 68
- GlassFit Flow SV-1701 Top — 72
- GlassFit Flow SV-1702 Side — 74
- GlassFit Flow SV-1703 Top — 76
- GlassFit Flow SV-1704 Side — 78
- GlassFit Flow SV-1705 Fit In — 80
- GlassFit Flow SV-1801 Top — 84
- GlassFit Flow SV-1801 RX — 86
- GlassFit Flow SV-1802 Side — 88
- GlassFit Flow SV-1803 Top — 90

Handrails 93

Handrail systems

Handrails for Glass Railings 94
Wall mounted handrails 102
FAST Handrails 104
Sekkei 106
DecoLed 110
Flex Height 114
Stand-Rail 116
Oval 120
Equal 122

Technical Documentation 124

Instructions, glossary

Installation instructions 125
Components 170
DIY 201
Care and maintenance guide 210
Glossary 212

Visual Identification System

How to Navigate this Catalogue

Each product family is identified with its own visual code. This system is designed to help you navigate the catalogue easily.

Comenza	|	**GlassFit Frame**	□
Minimal Post	|	**GlassFit Flow**	—
GlassFit Surface	●	**Handrails**	‖
GlassFit Gravity	■	**Technical Documentation**	|

Railing Passion

Comenza is a global company specializing in design railing systems, providing solutions adapted to people's needs in the spaces they inhabit through high-quality products that guarantee their safety and well-being.

Over the last few years, we have established ourselves as an international benchmark in the design and development of modular railing systems, with our solutions installed in hotels, residential and commercial buildings, shopping centers, corporate and institutional headquarters, and single-family homes.

www.comenza.com

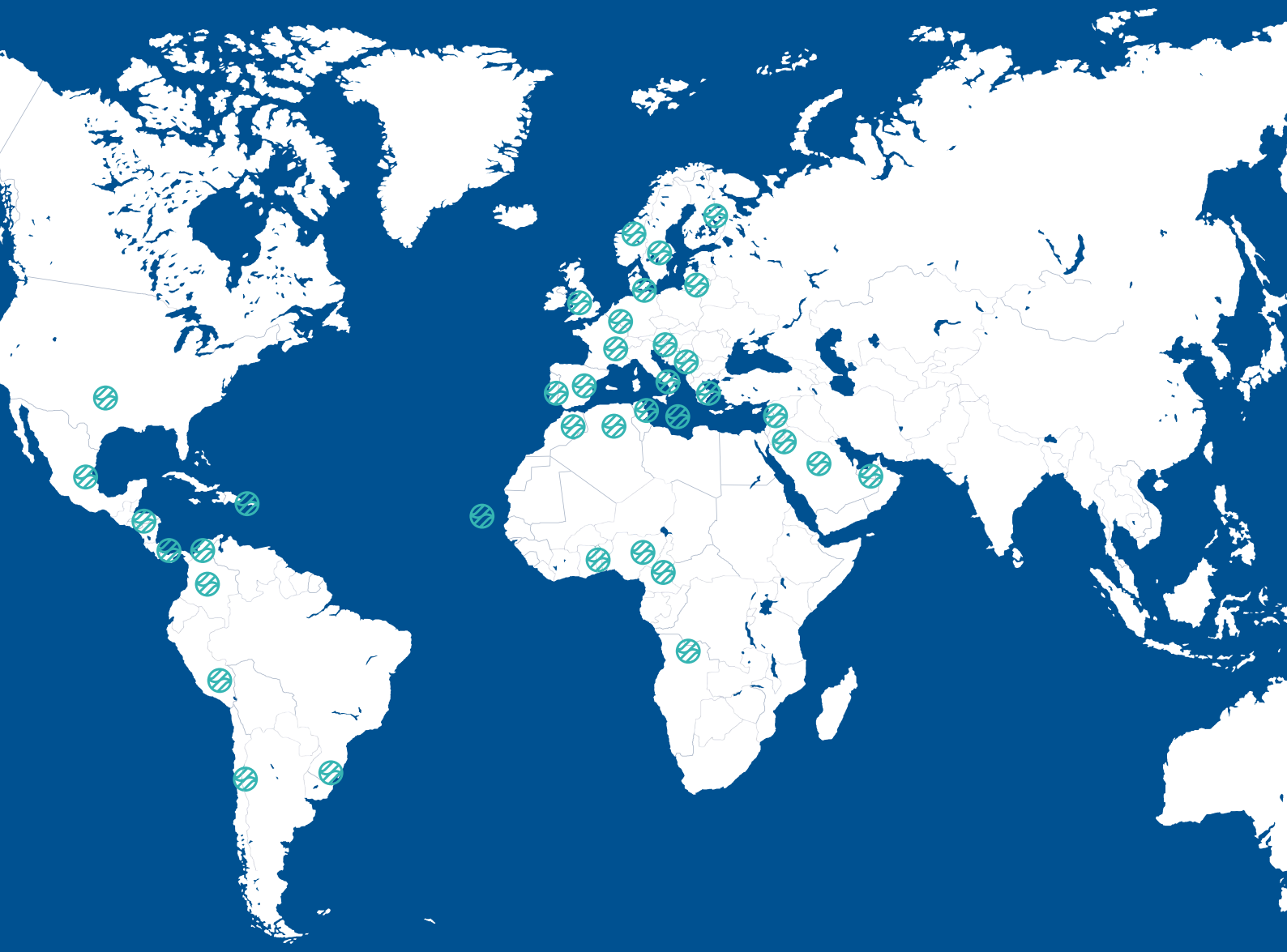

International

Following the philosophy of "Think Global, Act Local", we offer high-quality railing systems, technically adapted to the requirements of each market, combining distinctive design, maximum functionality, and reliable logistics and supply capabilities.

Thanks to the more than 2,000 customers who have trusted - and continue to trust - our brand, Comenza railing systems are now installed and distributed in countries around the world.

Countries

+30

Meters of railing installed

+130.000

Safety

Safety, an essential commitment for Comenza

At Comenza, safety is an exact science. Our Engineering Department designs railing and handrail systems aligned with the highest requirements of the most demanding international building codes, delivering structural integrity, impact resistance and long-term reliability for high-traffic and complex architecture.

In-House Testing Laboratory & Third-Party Certification

Through static and dynamic load testing in our facilities, we validate the mechanical performance of every profile, glass panel, and anchoring system under extreme conditions.

To guarantee full compliance across global markets, our systems are tested, certified and accredited by world-leading independent institutes including CSTB and Applus to ensure that our solutions meet the specific requirements of each market.

This technical expertise allows us to offer professionals the confidence of working with systems that have been developed, tested and validated to help create safer spaces, without compromising on design or architectural integration.

Compliant

with key international safety standards

CTE	Avis Technique	BS	NS	UNI	SS/EN
CTE Spain	Avis Technique France	British Standard	Norway Standard	Italy Standard	Sweden Standard

We work closely with some of the world's most recognized certification institutions to ensure that our railing systems meet the regulatory requirements in the country where they are marketed.

Testing Laboratoy

In our In-House Testing Laboratory, our engineering department carries out static and dynamic load tests to develop and validate railing solutions under the most demanding conditions.

Comenza works closely with international certification institutions to carry out testing and validate its systems, thereby ensuring compliance with regulatory requirements and the performance of each solution.

Technical Office

Do you need technical support for your project ?

Comenza's Technical Office, led by specialized architects and enfineers partners with architectural firms, specifiers and installers worldwide, providing technical endorsement from early concept design to site installation and after-sales services.

From defining the most suitable solution to its integration on site, our Technical Office provides its expertise to meet the technical, construction, and regulatory requirements of each project.

Core Engineering Services for Professionals:

Feasibility Analysis
Evaluation of project constraints, base-structure interaction (concrete, steel, or curtain walling), and material compatibility to prevent galvanic corrosion.

Structural Calculations & Finite Element Analysis (FEA)
Custom mechanical reports incorporating horizontal line loads, wind loads, and anchor stress verifications via FEA (Finite Element Analysis) and analytical modeling.

Code Compliance & Certification Support
Regulatory assessment tailored to the project location, providing test reports, documentation and technical compliance sheets for local building control approval.

Construction details
Integration-ready constrution details and parametric BIM families to streamline coordination among trades.

Configurator

Railing configurator

A tool designed to streamline project management.

1. **Select** the railing model.
2. **Configure** your railing system easily.
3. **Share** your configurations.
4. **Download** all technical specifications.
5. **Contact** our sales team.

Personalized Support

At Comenza, our technical sales team provides close, expert support, working alongside our clients from the earliest stages of their projects. We offer comprehensive technical guidance on railing solutions, applicable regulations and the specific requirements of each project. We are committed to ensuring safety, efficiency and regulatory compliance in every installation, tailoring our solutions to the specific requirements of each project.

Comenza Black Finish

Comenza's Black Finish is a PVD treatment applied to stainless steel, providing an elegant matt black appearance with high resistance to corrosion, UV radiation, environmental pollution and wear, significantly outperforming the durability of conventional finishes. Available for the GlassFit CC-800, CC-801, CC-775, CC-782 and CC-791 systems. This finish offers a contemporary aesthetic without compromising the technical performance of our systems, ensuring efficient installation and compliance with applicable regulations.

GlassFit Surface CC-791

The GlassFit CC-791 system is a side-mounted glass railing system with stainless steel glass clamps, designed to optimize usable space and enhance the aesthetics of any project. The system is compatible with annealed glass, reducing glass costs and ensuring faster material availability without compromising the safety and functionality of the system. When used with tempered glass, the system allows for larger glass spans, reducing the number of clamps and anchors required. This provides a more cost-effective solution per linear meter while also reducing installation time. The system complies with the CTE requirements for private-use areas.

Minimal Post MT-201

The Minimal Post MT-201 system is a glass railing system with modular stainless-steel posts, with a compact design that delivers a light and contemporary aesthetic. Its compatibility with low-thickness glass panels expands design possibilities and optimizes resources on site. In addition, the system incorporates adjustment devices that ensure precise installation and complies with the requirements of the CTE applicable to private-use areas.

Minimal Post

Post railing systems

Minimal Post

Post railing systems

Comenza's Minimal Post range consists of glass railing systems with modular stainless-steel posts, designed to offer versatile solutions and facilitate on-site installation. Its design enables adaptation to different project requirements and configurations. The systems are tested in accordance with CTE criteria for private-use areas. They incorporate adjustment devices that simplify the installation process and ensure a precise result, including on uneven slabs or stair flights.

MT-200

MT-201

Our Minimal Post system

Range	*Systems*	*Standards and use*	*Mounting*
		CTE	Top mount
Minimal Post	MT-200	Private use	●
	MT-201	Private use	●

Private use

Built-in installation devices

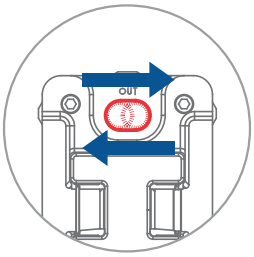

Slot 180°

DEVICES TO CORRECT DRILL DEVIATIONS

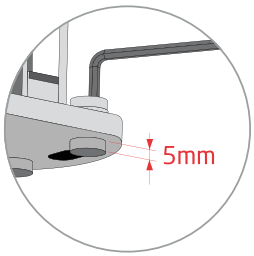

Level 3D

3-AXIS LEVELLING DEVICE

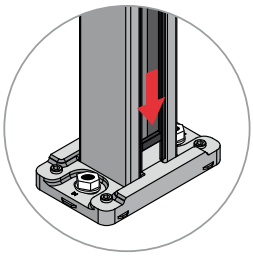

Horizontal Control

GLASS-TO-GLASS ALIGNMENT DEVICE

Safety

At **Comenza,** we focus on developing railing systems designed to comply with the most demanding **national and international building codes,** helping ensure the highest level of safety for users around the world. We have our own **laboratory,** which enables us to develop products that have been tested under highly demanding conditions and to carry out tests in accordance with regulatory requirements. Our **Technical office,** is formed by an international team of railing specialists, that work closely with architects and installers worldwide, providing technical support and guidance throughout every stage of their building projects.

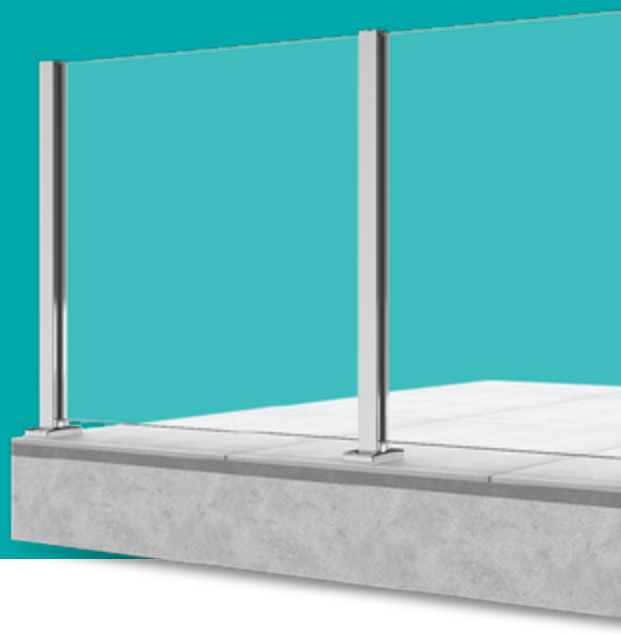

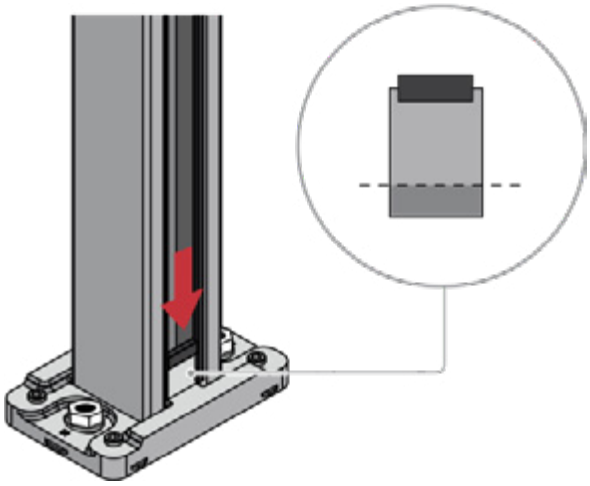

HORIZONTAL CONTROL

The MT-200 and MT-201 systems of the Minimal Post range incorporate the HORIZONTAL CONTROL glass-to-glass alignment device, designed to facilitate the vertical adjustment of the glass and guarantee perfect alignment at its upper part. This system allows for the correction of minor height differences between adjacent posts (<20 mm), ensuring a clean visual continuity and a precise finish along the entire railing.

PM-200 KIT

The PM-200 kit is specifically designed to simplify the installation of the MT-201 system on staircases. This kit allows the railing to clear the steps and can be easily adapted to the measures you need by performing cuts.

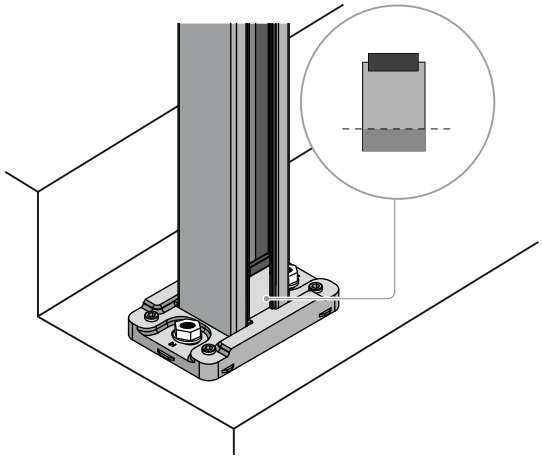

Minimal Post MT-200

Post railing system

Railing system with modular posts that optimizes glass use

The Minimal Post MT-200 system is a glass railing system with modular stainless-steel posts, designed to optimize glass use and simplify the installation process. It is compatible with annealed and low-thickness glass, which contributes to material availability and reduces costs. It includes adjustment devices that allow for customization, making installation easier and ensuring precise alignment. The system complies with the CTE requirements for private-use areas.

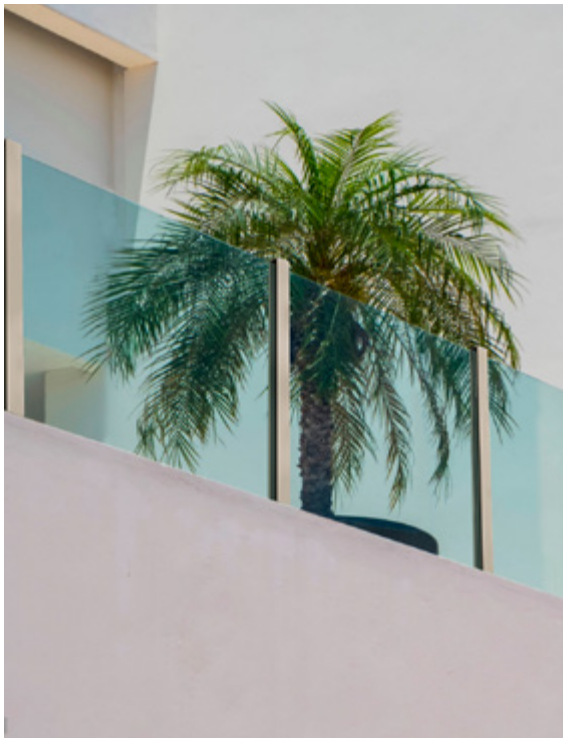

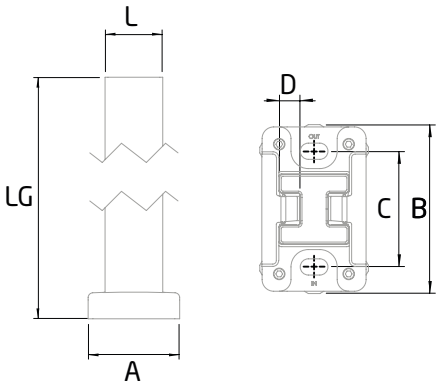

MT-200 AISI-316

BA

	L	A	B	C	D	LG
1	60	95	147	100	18	1105

Slot 180°

Level 3D

MT-200

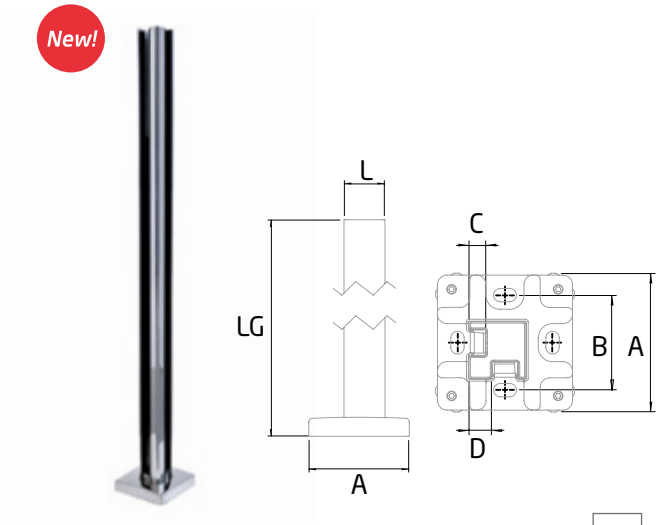

MT-200-C INSIDE AISI-316 BA

	□L	A	B	C	D	LG
1	60	147	100	18	24	1105

Corner for railing post
Adjustable

Slot 180° | Level 3D

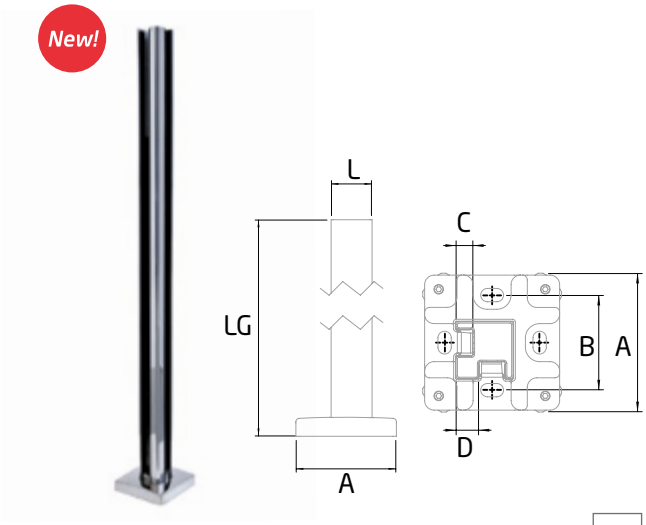

MT-200-C OUTSIDE AISI-316 BA

	□L	A	B	C	D	LG
1	60	147	100	18	24	1105

Corner for railing post
Adjustable

Slot 180° | Level 3D

System components and accessories

Reference		Page
PL-200 KIT	Glazing kit for railing systems with posts MT-200, MT-200-C	Page 170
PM-200 KIT	Staircase glazing installation kit	Page 170
EC-200-1 AISI-316	Side platen for railing systems with posts MT-200 - left or right mounting	Page 170
TF-541-L/R AISI-316	End cap for post - left or right mounting	Page 171
TF-541-M AISI-316	End cap for post - central mounting	Page 171
TF-541-C AISI-316	End cap for corner continuous glass panel	Page 171
TF-540 AISI-316	End cap for post - central, left or right mounting	Page 170
TF-540-C AISI-316	End cap for corner post	Page 171

Table of uses

Standard/Use	Glass	Height	Length	Glazing kit	Anchoring
CTE 0.8kN/m	L(2XANG) PVB (e=12.76mm)	H≤ 1100 mm	H≤ 1200 mm	PL-200 KIT (12.38-12.76)	FIS VS 300 T M10 A4 FIS VS 300 T M10 ZINC
	L(2XTTG) PVB (e=12.76mm)	H≤ 1100 mm	H≤ 1500 mm	PL-200 KIT (12.38-12.76)	FIS VS 300 T M10 A4 FIS VS 300 T M10 ZINC

Private use

Informative Note: The choice of glass and glazingset depends on the regulations to be met. The published information on recommended systems, anchors, and glass does not take wind action into account. For any inquiries, please contact Technical Support.

Minimal Post MT-201

Post railing system

Railing system with modular mini-posts that simplifies every installation.

The Minimal Post-MT-201 system is a glass railing system with modular stainless-steel posts, designed to offer a light aesthetic and ease installation. Its compact posts minimize the visual impact of the system, allowing the glass to take the spotlight. It integrates the SLOT 180, LEVEL 3D, and HORIZONTAL CONTROL devices, which simplify the railing installation process. Additionally, for installation on stairs, it includes the PM-200 kit. The system complies with CTE requirements for spaces with private use categories.

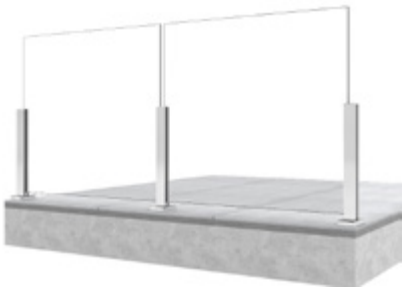

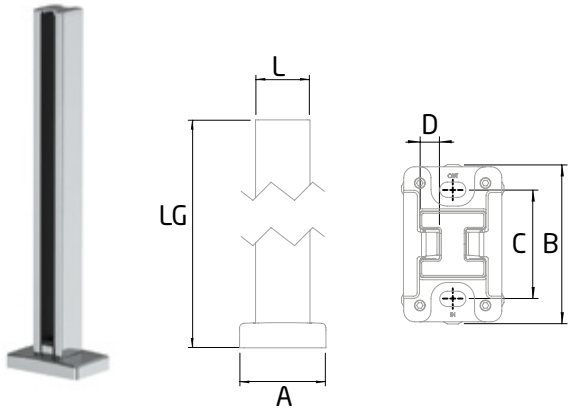

MT-201 AISI-316

BA

	L	A	B	C	D	LG
1	60	95	147	100	18	605

Slot 180° | Level 3D

New!

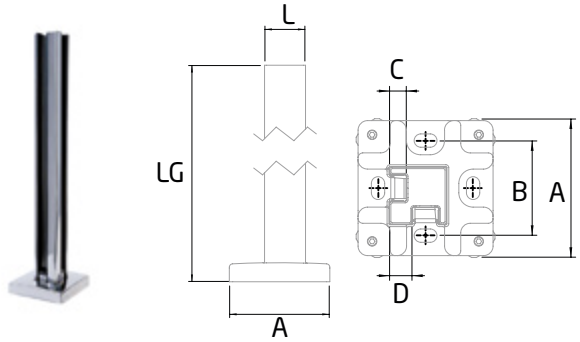

MT-201-C INSIDE AISI-316

BA

	□L	A	B	C	D	LG
1	60	147	100	18	24	605

Corner for railing post
Adjustable

Slot 180° | Level 3D

New!

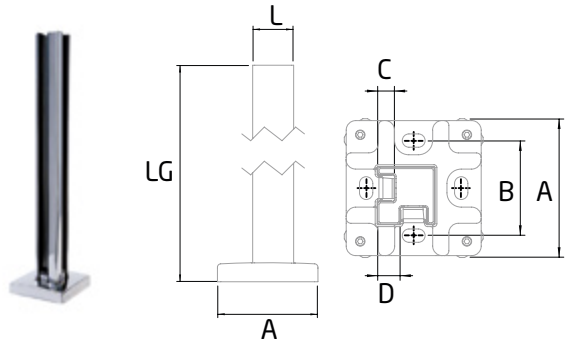

MT-201-C OUTSIDE AISI-316

BA

	□L	A	B	C	D	LG
1	60	147	100	18	24	605

Corner for railing post
Adjustable

Slot 180° | Level 3D

System components and accessories

Reference		Page
PL-201 KIT	Glazing kit for railing systems with posts MT-201, MT-201-C	Page 171
PM-200 KIT	Staircase glazing installation kit	Page 170
EC-201-1 AISI-316	Side platen for railing systems with posts MT-201 left or right mounting	Page 171
TF-541-L/R AISI-316	End cap for post, left or right mounting	Page 171
TF-541-M AISI-316	End cap for post, central mounting	Page 171
TF-541-C AISI-316	End cap for corner continuous glass panel	Page 171
TF-540 AISI-316	End cap for post, central, left or right mounting	Page 170
TF-540-C AISI-316	End cap for corner post	Page 171

Table of uses

Standard/Use	Glass	Height	Length	Glazing Kit	Anchoring
CTE 0.8kN/m	L(2XTTG) PVB (e=12.76mm)	H≤ 1100 mm	H≤ 1200 mm	PL-201 KIT (12.38-12.76)	FIS VS 300 T M10

Private use

Informative Note: The choice of glass and glazingset depends on the regulations to be met. The published information on recommended systems, anchors, and glass does not take wind action into account. For any inquiries, please contact Technical Support.

GlassFit Surface

Clamp Systems

GlassFit Surface

Clamp Systems

Comenza's GlassFit Surface range comprises glass railing systems fixed with clamps, designed to provide precise solutions and seamless integration into any project. Its design highlights the presence of the glass and adapts to different installation configurations. The systems are tested in accordance with CTE requirements, with solutions suitable for both private and public-use areas. They include adjustment devices that facilitate installation and ensure precise glass alignment on site.

Our Surface systems

CC-800

CC-801

CC-780

CC-782

CC-791

Range	*Systems*	*Standards and use*					*Mouting*	
		CTE	Avis Technique	NS 3510:2015	UNI 11678:2017	SS/EN 1994:1:1:1	Top	Side
Surface	CC-800	Private use, Public use, Pools	Public use	Private use	Public use		●	
	CC-801	Private use				Private use	●	
	CC-780	Private use					●	
	CC-782	Private use					●	
	CC-791	Private use						●

Private use Public use Pools

Built-in installation devices

Slot 180°

Device to correct drill deviations

Slot 360°

Slotted positioning device with 360-degree rotation

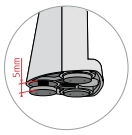

Level 3D

3-Axis levelling device

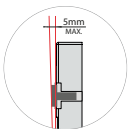

Level 2D

Levelling device

Curved

Compatibility with curved glass for unique projects

Within the GlassFit Surface range, we have glazing kits for each clamp that allow for projects with curved glass. These configurations expand the system's design possibilities, facilitating its integration into more complex architectural proposals without compromising functionality or safety.

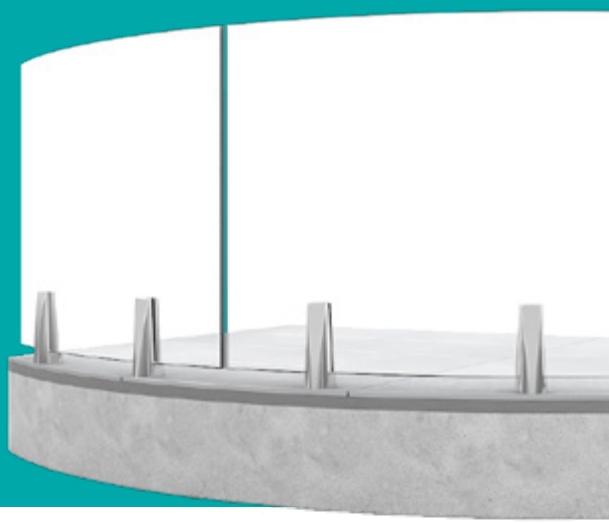

DUPLEX 2205

The GlassFit Surface range offers specific solutions made of 2205 DUPLEX stainless steel, to provide outstanding corrosion resistance for particularly demanding environments. This material allows the system to be installed in areas exposed to moisture, such as swimming pools or locations near the ocean, ensuring the system's durability and proper performance over time.

BLACK FINISH

These black PVD finishes are applied to the stainless steel product using a vapor deposition technique, which provides the steel with high resistance to factors such as UV exposure, corrosion, detergents or solvents, and pollution. Black Finish adds character to the overall design and blends seamlessly with contemporary architectural trends, expanding customisation possibilities.

Handrail options

There are several handrail options suitable for the GlassFit Surface railing systems. Comenza's variety of handrail brackets allows for the installation of round stainless steel tubes, round wooden tubes, square tubes, or slotted tubes.

RP-1400

RP-1410

SV-1255

SV-1260

ST-314

ST-315

GlassFit Surface CC-800

Clamp System

High-performance clamp system for public and private use

The GlassFit CC-800 system is a glass railing solution featuring stainless steel clamps. Its configuration allows for a greater spacing between anchors, reducing the number of clamps required, improving installation efficiency and optimizing overall system costs. It incorporates LEVEL 3D and SLOT 180 adjusting devices to properly level and align the system, compensating for any irregularities and deviations present in the structural slab. Furthermore, it is available in three finish options: bright polished, satin and Black Finish (PVD) and in AISI-316 or DUPLEX 2205 grades. The latter is ideal for installation in high chlorine exposure areas such as swimming pools. Thanks to its new PL-80 CURVED glazing kit, the railing can be adapted to curved glass. It complies with the most stringent building codes and guarantees the highest level of safety for users.

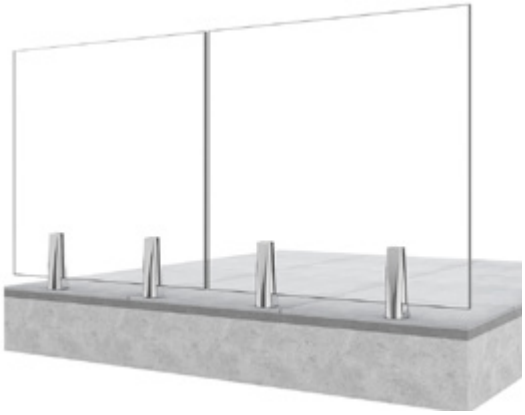

CC-800

	A	B	C	D	RE
1	250	100	90	24	50-55

Material	Finish		
AISI-316	BA	SATIN	SATIN BLACK FINISH
DUPLEX 2205	BA	SATIN	

Slot 180° Level 3D

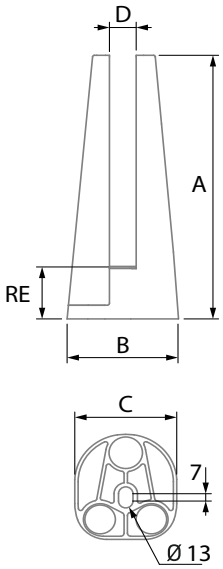

black finish

The GlassFit CC-800 system is available in Black Finish

This black PVD finish for glass railing systems is applied to the stainless-steel product using a vapor deposition technique, thus creating a coating that is highly resistant to factors such as UV exposure, corrosion, and pollution.

System components and accessories

Reference		Page
PL-80	Glazing kit for floor clamps in glass railing systems	Page 187
PL-80 Curved	Glazing kit for floor clamps in curved glass railing systems	Page 187

Handrail options	RP-1400 - RP-1410 - SV-1255 - ST-314 - ST-315 - SV-1260

Table of uses

Standard/Use	Glass	Height	Length	Glazing Kit	Anchoring
CTE 0.8kN/m	L(2xTTG) PVB (e=16.76 mm)	H≤ 1100 mm	L≤ 1700 mm	PL-80 (16.38-16.76)-KIT	FIS VS 300 T M12
	L(2xTTG) PVB (e=17.52 mm)	H≤ 1100 mm	L≤ 1700 mm	PL-80 (17.52)-KIT	
	L(2xANG) PVB (e=20.76 mm)	H≤ 1100 mm	L≤ 1300 mm	PL-80 (20.38-20.76)-KIT	
	L(2xANG) DG-41 (e=20.76 mm)	H≤ 1100 mm	L≤ 1700 mm	PL-80 (20.38-20.76)-KIT	
	L(2xTTG) PVB (e=16.76 mm)	H≤ 1100 mm	L≤ 1700 mm	PL-80 CURVED (16.38-16.76)-KIT **	
	L(2xTTG) PVB (e=17.52 mm)	H≤ 1100 mm	L≤ 1700 mm	PL-80 CURVED (17.52)-KIT **	
	L(2xANG) PVB (e=20.76 mm)	H≤ 1100 mm	L≤ 1300 mm	PL-80 CURVED (20.38-20.76)-KIT **	
	L(2xANG) DG-41 (e=20.76 mm)	H≤ 1100 mm	L≤ 1700 mm	PL-80 CURVED (20.38-20.76)-KIT **	
CTE 1.6kN/m	L(2xTTG) PVB (e=21.52 mm)	H≤ 1100 mm	L≤ 1400 mm	PL-80 (21.52)-KIT *	FIS VS 300 T M12
	L(2xTTG) PVB (e=21.52 mm)	H≤ 1100 mm	L≤ 1400 mm	PL-80 CURVED (21.52)-KIT **	
CTE 0.5kN/m	L(2xANG) PVB (e=20.76 mm)	H≤ 1200 mm	L≤ 1800 mm	PL-80 (20.38-20.76)-KIT *	FIS VS 300 T M12
	L(2xANG) PVB (e=20.76 mm)	H≤ 1200 mm	L≤ 1800 mm	PL-80 (20.38-20.76)-KIT **	

Standard/Use	Glass	Height	Length	Glazing Kit	Anchoring
Avis Technique 1kN/m	L(2xTTG) PVB (e=21.52 mm)	H≤ 1100 mm	L≤ 1200 mm	PL-80 (21.52)-KIT *	FIS VS 300 T M12

Standard/Use	Glass	Height	Length	Glazing Kit	Anchoring
NF 0.5kN/m	L(2xTTG) PVB (e=21.52 mm)	H≤ 1000 mm	L≤ 1300 mm	PL-80 (21.52)-KIT *	FIS VS 300 T M12

Standard/Use	Glass	Height	Length	Glazing Kit	Anchoring
UNI 0.8kN/m	L(2xTTG) PVB (e=21.52 mm)	H≤ 1200 mm	L≤ 1100 mm	PL-80 (21.52)-KIT *	FIS VS 300 T M12

Private use Public use Pools

*Material: DUPLEX 2205
**Compatible with glass panels with a minimum outer radius of 1 meter and a maximum outer radius of 4 meters

Informative Note: The choice of glass and glazingset depends on the regulations to be met. The published information on recommended systems, anchors, and glass does not take wind action into account. For any inquiries, please contact Technical Support.

GlassFit Surface CC-801

Clamp System

Glass railing system with top mount clamps and greater resistance

The GlassFit CC-801 system is a glass railing system featuring stainless steel glass clamps, designed to provide exceptional rigidity and structural strength. It is available in different finishes: bright polished, satin and Black Finish PVD. Its optimized design allows modulations of up to 1,300 mm, improving system efficiency. It includes adjustment devices that facilitate installation and enables precise glass alignment, even after the glass has been installed, reducing installation time. The system complies with the requirements of the CTE for private-use areas.

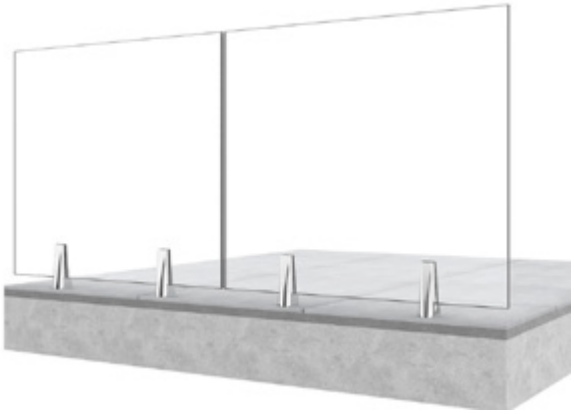

CC-801

	A	B	C	D	RE
1	200	90	70	20	50-55

Material	Finish		
AISI-316	BA	SATIN	SATIN BLACK FINISH

Slot 180° Level 3D

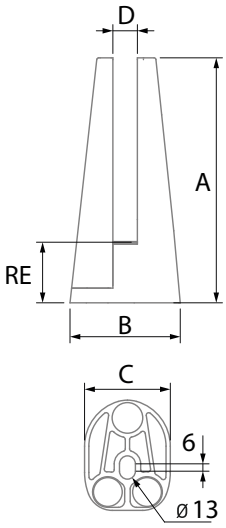

CC-801

black finish

The GlassFit CC-801 system is available in Black Finish

This black PVD finish for glass railing systems is applied to the stainless-steel product using a vapor deposition technique, thus creating a coating that is highly resistant to factors such as UV exposure, corrosion, and pollution.

System components and accessories

Reference		Page
PL-81	Glazing kit for floor clamps in glass railing systems	Page 188
PL-81 Curved	Glazing kit for floor clamps in curved glass railing systems	Page 188

Handrail options	RP-1400 - RP-1410 - SV-1255 - ST-314 - ST-315 - SV-1260

Table of uses

Standard/Use	Glass	Height	Length	Glazing Kit	Anchoring
CTE 0.8kN/m	L(2xTTG) PVB (e=12.76 mm)	H≤ 700 mm	L≤ 1300 mm	PL-81 (12.38-12.76)-KIT	FIS VS 300 T M12
	L(2xTTG) PVB (e=16.76 mm)	H≤ 1100 mm	L≤ 1300 mm	PL-81 (16.38-16.76)-KIT	
	L(2xTTG) PVB (e=17.52 mm)	H≤ 1100 mm	L≤ 1300 mm	PL-81 (17.52)-KIT	
	L(2xTTG) PVB (e=12.76 mm)	H≤ 700 mm	L≤ 1300 mm	PL-81 CURVED (12.38-12.76)-KIT **	
	L(2xTTG) PVB (e=16.76 mm)	H≤ 1100 mm	L≤ 1300 mm	PL-81 CURVED (16.38-16.76)-KIT **	
	L(2xTTG) PVB (e=17.52 mm)	H≤ 1100 mm	L≤ 1300 mm	PL-81 CURVED (17.52)-KIT **	

Standard/Use	Glass	Height	Length	Glazing Kit	Anchoring
SS/EN 1991-1-1 0.5kN/m	L (2xTTG) PVB (e=12.76mm)	H≤ 1100 mm	L≤ 1100 mm	PL-81 (12.38-12.76)-KIT	FIS VS 300 T M12

Private use

**Compatible with glass panels with a minimum outer radius of 1 meter and a maximum outer radius of 4 meters

Informative Note: The choice of glass and glazingset depends on the regulations to be met. The published information on recommended systems, anchors, and glass does not take wind action into account. For any inquiries, please contact Technical Support.

GlassFit Surface CC-780

Clamp System

Glass railing system with clamps and minimalist design

The CC-780 railing system is a stainless steel clamp solution designed in accordance with the requirements of the Technical Building Code for use in private spaces such as single-family homes, hotel balconies, and residential buildings, or as a pool enclosure. It incorporates Slot 180 and Level 3D leveling devices that allow for perfect alignment with the installed glass.

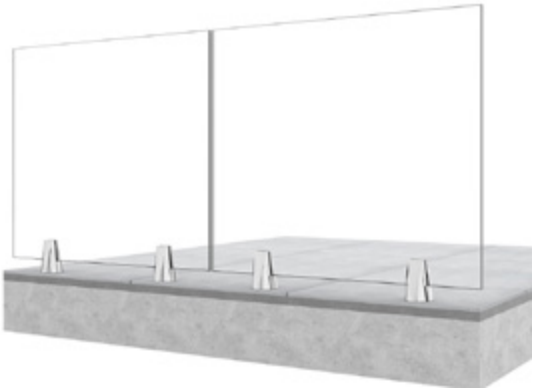

CC-780

BA | SATIN

	A	B	C	D	RE
1	155	83.6	110	24	60-65

Slot 180° Level 3D

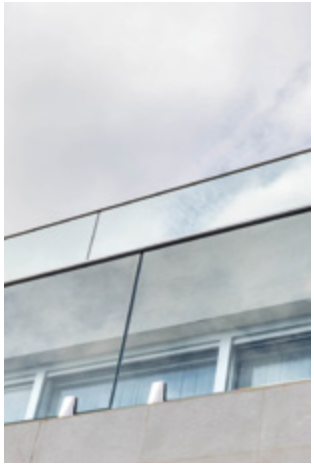

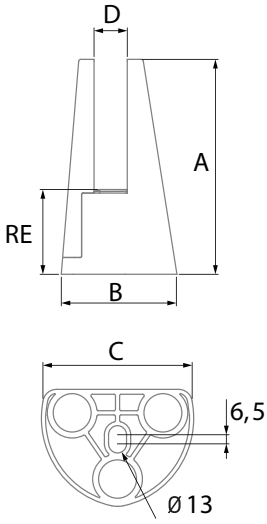

CC-780

System components and accessories

Reference		Page
PL-70	Glazing kit for floor clamps in glass railing systems	Page 188
PL-70 Curved	Glazing kit for floor clamps in curved glass railing systems	Page 188

Handrail options	RP-1400 - RP-1410 - SV-1255 - ST-314 - ST-315 - SV-1260

Table of uses

Standard/Use	Glass	Height	Length	Glazing Kit	Anchoring
CTE 0.8kN/m	L(2xTTG) PVB (e=12.76 mm)	H≤ 700 mm	L≤ 1100 mm	PL-70 (12.38-12.76)-KIT	FIS VS 300 T M12
	L(2xTTG) PVB (e=16.76 mm)	H≤ 1100 mm	L≤ 1200 mm	PL-70 (16.38-16.76)-KIT	
	L(2xTTG) PVB (e=17.52 mm)	H≤ 1100 mm	L≤ 1200 mm	PL-70 (17.52)-KIT	
	L(2xTTG) PVB (e=12.76 mm)	H≤ 700 mm	L≤ 1100 mm	PL-70 CURVED (12.38-12.76)-KIT **	
	L(2xTTG) PVB (e=16.76 mm)	H≤ 1100 mm	L≤ 1200 mm	PL-70 CURVED (16.38-16.76)-KIT **	
	L(2xTTG) PVB (e=17.52 mm)	H≤ 1100 mm	L≤ 1200 mm	PL-70 CURVED (17.52)-KIT **	

Private use

**Compatible with glass panels with a minimum outer radius of 1 meter and a maximum outer radius of 4 meters

Informative Note: The choice of glass and glazingset depends on the regulations to be met. The published information on recommended systems, anchors, and glass does not take wind action into account. For any inquiries, please contact Technical Support.

GlassFit Surface CC-782

Clamp System

Glass railing system with clamps and greater design flexibility

The GlassFit CC-782 system is a glass railing solution with stainless steel clamps that allows for greater glass modulation, with lengths of up to 1,500 mm, streamlining installation times since fewer clamps are needed per meter, as well as fewer anchors to install. Its configuration allows working with different finishes, including Black Finish PVD, facilitating its adaptation to different project styles. It incorporates leveling devices that simplify installation and allow precise glass adjustment without the need to drill it. The design of its base enables different types of anchoring, both chemical and mechanical, and supports glass with a thickness of up to 17.52 mm. The system complies with CTE requirements for spaces with private use category.

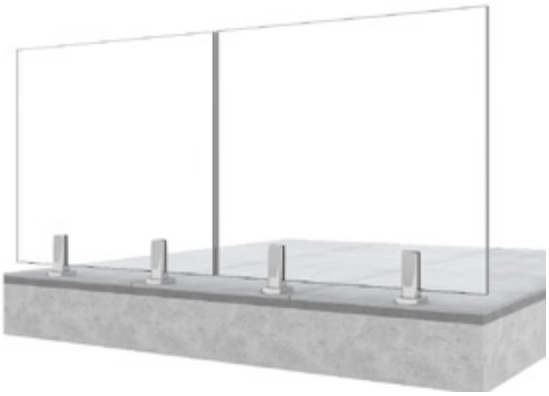

CC-782

	A	B	C	D	RE
1	192	140	95	20	50-55

Material	Finish		
AISI-316	BA	SATIN	SATIN BLACK FINISH

Slot 180° Level

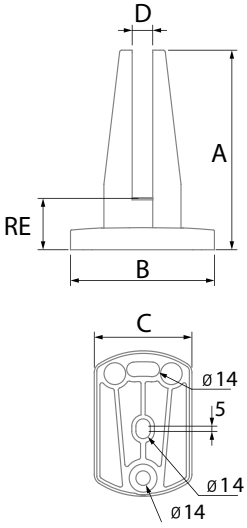

CC-782

black finish

The GlassFit CC-782 system is available in Black Finish

This black PVD finish for glass railing systems is applied to the stainless-steel product using a vapor deposition technique, thus creating a coating that is highly resistant to factors such as UV exposure, corrosion, and pollution.

System components and accessories

Reference		*Page*
PL-72	Glazing kit for floor clamps in glass railing systems	Page 188
PL-72 Curved	Glazing kit for floor clamps in curved glass railing systems	Page 188

Handrail options	RP-1400 - RP-1410 - SV-1255 - ST-314 - ST-315 - SV-1260

Table of uses

Standard/Use	*Glass*	*Height*	*Length*	*Glazing Kit*	*Anchoring*
CTE 0.8kN/m	L(2xTTG) PVB (e=12.76 mm)	H≤ 700 mm	L≤ 1300 mm	PL-72 (12.38-12.76)-KIT	FIS VS 300 T M12 HUS4-C 10X110 HUS4-CR 10X105 FH II-SK M8x105 FH II-SK M8x125
	L(2xTTG) PVB (e=16.76 mm)	H≤ 1100 mm	L≤ 1500 mm	PL-72 (16.38-16.76)-KIT	
	L(2xTTG) PVB (e=17.52 mm)	H≤ 1100 mm	L≤ 1500 mm	PL-72 (17.52)-KIT	
	L(2xTTG) PVB (e=12.76 mm)	H≤ 700 mm	L≤ 1300 mm	PL-72 CURVED (12.38-12.76)-KIT **	
	L(2xTTG) PVB (e=16.76 mm)	H≤ 1100 mm	L≤ 1500 mm	PL-72 CURVED (16.38-16.76)-KIT **	
	L(2xTTG) PVB (e=17.52 mm)	H≤ 1100 mm	L≤ 1500 mm	PL-72 CURVED (17.52)-KIT **	

Private use

**Compatible with glass panels with a minimum outer radius of 1 meter and a maximum outer radius of 4 meters

Informative Note: The choice of glass and glazingset depends on the regulations to be met. The published information on recommended systems, anchors, and glass does not take wind action into account. For any inquiries, please contact Technical Support.

GlassFit Surface CC-791

Clamp System

Side mounting glass railing system offering maximum transparency

The GlassFit CC-791 system is a glass railing solution with side-mounted stainless steel clamps. It has been designed to optimize usable space and enhance the aesthetics of projects, especially in spaces with stairs. The CC-791 supports glass up to 21.52 mm and is compatible with annealed or tempered glass, providing greater flexibility in project design and execution. The system achieves modulations of up to 1,700 mm, which reduces the number of clamps and anchors needed per linear meter installed, optimizing installation times and offering an efficient and cost-competitive solution per installed meter. The system complies with CTE requirements for spaces with private use category.

CC-791

	A	B	C	D	RE
1	250	81	60	25	25-30

Material	Finish		
AISI-316	BA	SATIN	SATIN BLACK FINISH

Slot 360° Level 2D

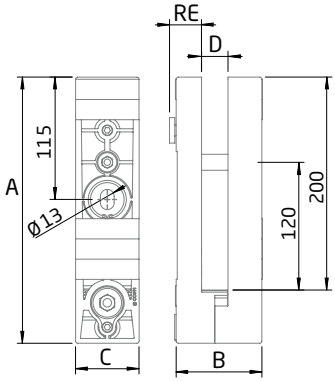

CC-791

black finish

The GlassFit CC-791 system is available in Black Finish

This black PVD finish for glass railing systems is applied to the stainless-steel product using a vapor deposition technique, thus creating a coating that is highly resistant to factors such as UV exposure, corrosion, and pollution.

System components and accessories

Reference		*Page*
PL-71	Glazing kit for floor clamps in glass railing systems	Page 189
PL-71 Curved	Cladding of side clamp for glass railing system	Page 189
CL-791-1	Glazing kit for floor clamps in curved glass railing systems	Page 189

Handrail options	RP-1400 - RP-1410 - SV-1255 - ST-314 - ST-315 - SV-1260

Table of uses

Standard/Use	*Glass*	*Height*	*Length*	*Glazing Kit*	*Anchoring*
CTE 0.8kN/m	L(2xTTG) PVB (e=17.52 mm *)	H≤ 1100 mm	L≤ 1700 mm	PL-71 (17.52)-KIT	FIS VS 300 T M12 HUS4-H 10X110 HUS4-HR 10X105
	L(2xANG) PVB (e=20.76 mm)	H≤ 1100 mm	L≤ 1200 mm	PL-71 (20.38-20.76)-KIT	
	L(2xTTG) PVB (e=17.52 mm *)	H≤ 1100 mm	L≤ 1700 mm	PL-71 CURVED (17.52)-KIT **	
	L(2xANG) PVB (e=20.76 mm)	H≤ 1100 mm	L≤ 1200 mm	PL-71 CURVED (20.38-20.76)-KIT **	

Private use

*Drilled glass Ø 20 / 24 mm.
**Compatible with glass panels with a minimum outer radius of 1 meter and a maximum outer radius of 4 meters

Informative Note: The choice of glass and glazingset depends on the regulations to be met. The published information on recommended systems, anchors, and glass does not take wind action into account. For any inquiries, please contact Technical Support.

GlassFit Gravity

Side adapter systems

GlassFit Gravity

Side adapter systems

Comenza's GlassFit Gravity range Compri side-mounted glass railing systems using adapters/buttons, designed to optimize space and improve integration into the project. Their configuration allows for an unobstructed view and makes the most of the usable surface area. The systems are tested according to CTE requirements, and are suitable solutions for spaces with private and public use category. They incorporate leveling devices that facilitate installation and guarantee precise glass adjustment.

Our Gravity systems

CC-772

CC-775

Range	*Systems*	*Standards and use*	*Mounting*
		CTE	Side
Gravity	CC-772	Private use	●
	CC-775	Private use, Public use	●

Private use Public use

Built-in installation devices

Slot 360°

Slotted positioning device with 360-degree rotation

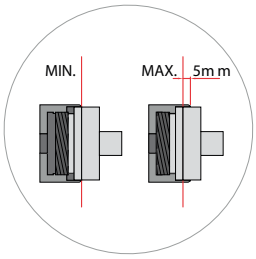

Level 2D

Levelling device

black finish

CC-775 with black PVD finish

The GlassFit Gravity range includes specific solutions suitable for Black finish, an option that enhances the aesthetics of the system and allows it to be adapted to projects with contemporary character. This finish creates a more modern and elegant appearance, expanding design possibilities without compromising its performance. The range offers options that combine functionality, architectural integration and customization.

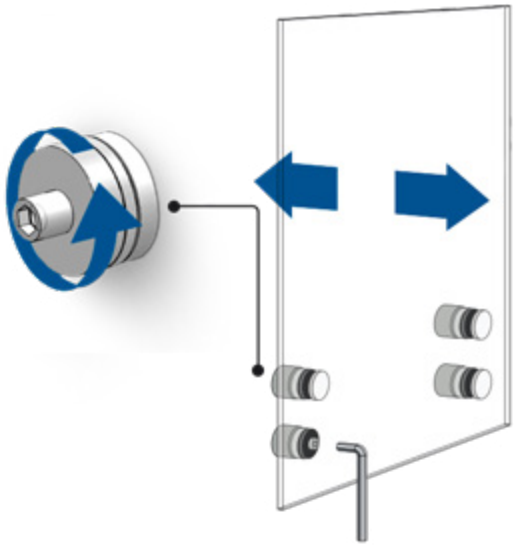

Level 2D

Levelling without removing the glass

The GlassFit Gravity range incorporate the LEVEL 2D adjustment system, designed to facilitate glass adjustment during installation. This system accommodates up to 5 mm of unevenness in the floor slab, ensuring correct alignment of the structure. Its main advantage is that all adjustments can be made with the glass already in place, without removing it, simplifying the process on site and significantly reducing installation time.

Handrail options

There are several handrail options suitable for the GlassFit Gravity railing systems. Comenza's variety of handrail brackets can be installed with round stainless steel tubes, round wooden tubes, square tubes, or slotted tubes.

RP-1400

RP-1410

SV-1255

SV-1260

ST-314

ST-315

GlassFit Gravity CC-775

Side adapter system

Glass railing system featuring side adapters and minimalist design

The GlassFit CC-775 system is a side-mounted glass railing system featuring adapters, designed to provide a clean appearance and exceptional transparency. Its design optimizes usable space and ensures unobstructed views. It includes adjustment devices that facilitate installation and ensure precise glass alignment on site. It is available in a range of finishes, including Black Finish, expanding the system's design possibilities. The system complies with the CTE requirements for private and public use areas.

CC-775

	øA	øB	øC	D	RE	G
2	30	33	9	8	35-40	8-17.52
2	50	52	13	17	43-48	8-21.52
2	60	62	14	16	40-45	19-31.52

Material	ø	Finish		
AISI-316	30	BA	SATIN	
AISI-316	50	BA	SATIN	SATIN BLACK FINISH
AISI-316	60	BA	SATIN	

Slot 360° Level 2D

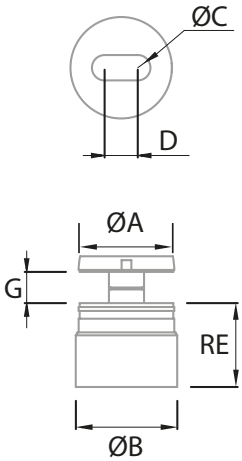

CC-775

black finish

The GlassFit CC-775 system is available in Black Finish

This black PVD finish for glass railing systems is applied to the system using a vapor deposition technique, which creates a coating that is highly resistant to factors such as UV exposure, corrosion, and pollution.

System components and accessories

Reference		Page
BR-2030	Hook wrench for glass adapters	Page 208

Handrail options	RP-1400 - RP-1410 - SV-1255 - ST-314 - ST-315 - SV-1260

Table of uses

Standard/Use	Diameter Ø	Glass	Height	Length	Anchoring
CTE 0.8kN/m	50	L(2xTTG) PVB (e=21.52mm)	H≤ 1100 mm	L≤ 1300 mm	FAZ II M12X120 FBN II M10X95 FIS VS 300 T M10 HUS4-HR 10x105 HUS4-H 10x110
CTE 1.6kN/m	60	L(2xTTG) PVB (e=25.52mm)	H≤ 1100 mm	L≤ 1000 mm	FAZ II M12X120 FIS VS 300 T M12

Private use Public use

Informative Note: The choice of glass and glazingset depends on the regulations to be met. The published information on recommended systems, anchors, and glass does not take wind action into account. For any inquiries, please contact Technical Support.

GlassFit Gravity CC-772

Side adapter system

Glass railing system with square side adapters

The GlassFit CC-772 system is a side-mounted glass railing system featuring square adapters, designed to provide a contemporary appearance and greater transparency. Its design optimizes usable space and ensures unobstructed view. It includes adjustment devices that facilitate installation and ensure precise glass alignment on site. It is available in polished and satin-finish stainless steel, enabling its easy integration into a variety of projects. The system complies with the requirements of the CTE for private-use areas.

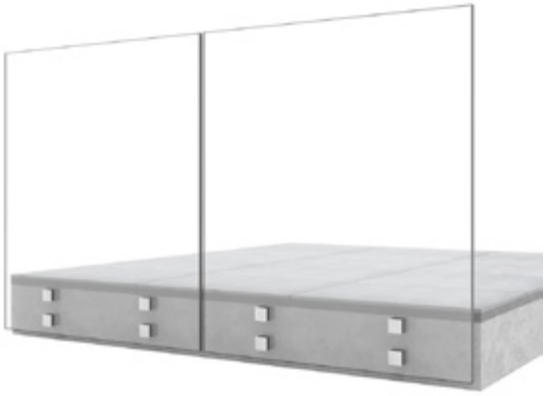

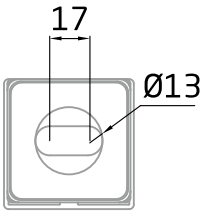

CC-772

	□L	RE	G
2	55	45-50	8-21.52

Slot 360° Level 2D

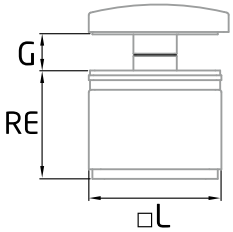

Handrail options	RP-1400 - RP-1410 - SV-1255 - ST-314 - ST-315 - SV-1260

Table of uses

Standard/Use	Glass	Height	Length	Anchoring
CTE 0.8kN/m	L(2xTTG) PVB (e=21.52mm)	H≤ 1100 mm	L≤ 1300 mm	FAZ II M12X120 FBN II M10X95 FIS VS 300 T M10 HUS4-HR 10x105 HUS4-H 10x110

Private use

Informative Note: The choice of glass and glazingset depends on the regulations to be met. The published information on recommended systems, anchors, and glass does not take wind action into account. For any inquiries, please contact Technical Support.

CC-772

Side adapter systems

GlassFit Frame

French balcony systems

GlassFit Frame

French balcony systems

The Comenza GlassFit Frame range includes the FB-10 French balcony system, designed to provide window safety. Its aluminium profile enhances the appearance of the façade while allowing maximum natural light to enter. The system has been tested in accordance with the CTE requirements for private and public use areas. It offers different mounting options and can be customized in the color required by the project, integrating seamlessly with the facade's joinery. Additionally, it is compatible with LED lighting.

Our Frame system

Range	*Systems*	*Standard and use*	*Mounting*		
		CTE	Face-mounted	Fixed to the window frame	Between jambs
GlassFit Frame	FB-10	Public use	●	●	●

Public use

Mounting options

Front mount

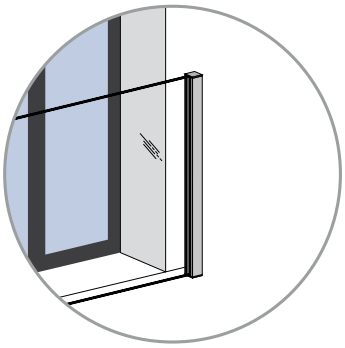

Face-mounted

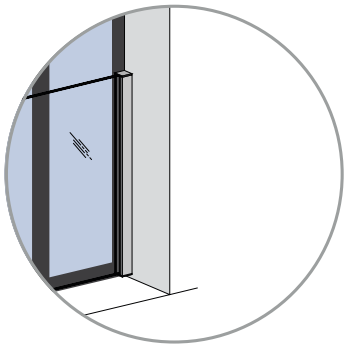

On the window frame

Side mount

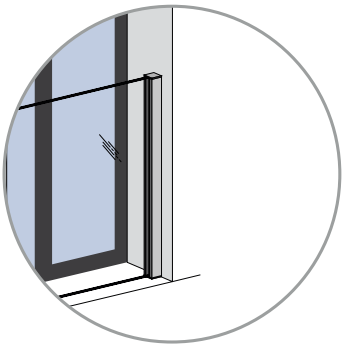

Between jambs

Safety

At **Comenza,** we focus on developing railing systems designed to comply with the most demanding **national and international building codes,** helping ensure the highest level of safety for users around the world. We have our own **laboratory,** which enables us to develop products that have been tested under highly demanding conditions and to carry out tests in accordance with regulatory requirements. Our **Technical office,** is formed by an international team of railing specialists, that work closely with architects and installers worldwide, providing technical support and guidance throughout every stage of their building projects.

Lighting

The FB-10 French balcony system, in addition to allowing maximum natural light into residential spaces and providing window protection, is compatible with integrated LED lighting. This solution enhances the aesthetic value of the façade and creates more attractive environments, adding value to the project in terms of both functionality and design.

Comenza RAL colours

The FB-10 French balcony system is available with a powder-coated finish in a wide range of RAL colours, allowing it to be aesthetically matched to each project. This finish is applied in accordance with Qualicoat and Qualicoat Seaside quality standards, ensuring high corrosion resistance and excellent durability in harsh environments. Thanks to this treatment, the system retains its durability and appearance over time.

GlassFit Frame FB-10

French balcony system

French balcony system with minimalist design and various mounting options

The GlassFit Frame FB-10 system is a French balcony system designed to ensure window security whilst maintaining a clean, contemporary aesthetic. Its aluminium profile harmoniously blends into the façade, while maintaining the flow of natural light. It offers various installation options – face-mounted, on the window frame, or between the jambs – being easily adaptable to any project. Customizable finishes and integration of LED lighting are also available. The system complies with the CTE requirements for public-use areas.

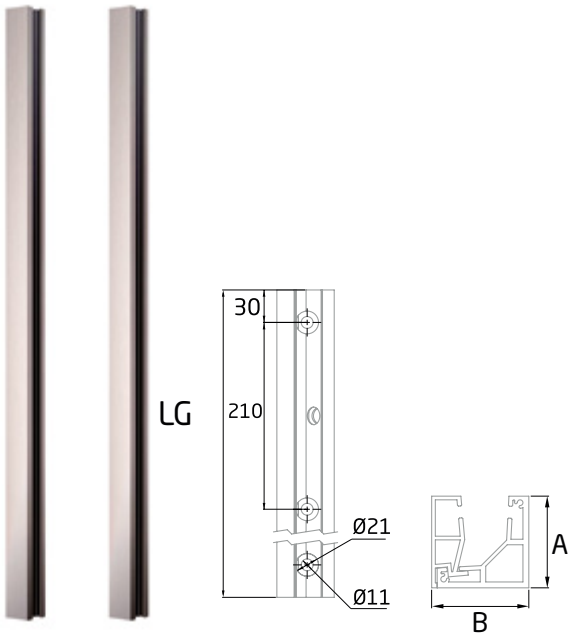

FB-10

		L	A	B
1	Kit: 2 Units	1110	50	53

FB-10

Mounting options

The FB-10 offers three different installation options: face-mounted, within the window frame and between jambs. In addition, the glass can be installed from either the inside or the outside of the building, making installation easier and providing greater flexibility for installers.

Front mount

Side mount

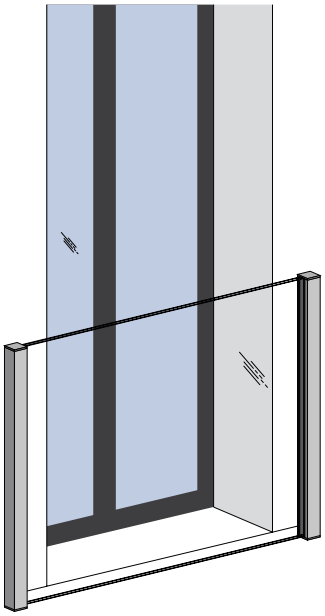

Face-mounted

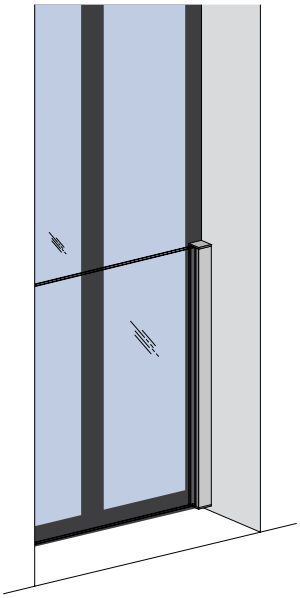

Within the window frame

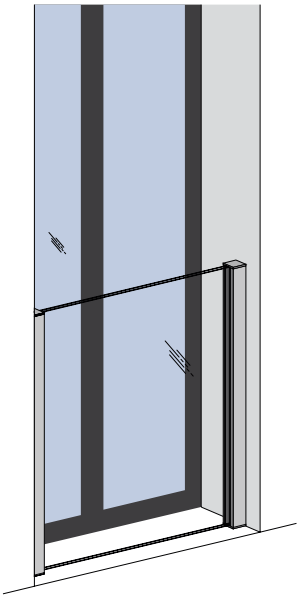

Between jambs

System components and accessories

Reference		*Page*
PL-10 KIT	Glazing kit for side-mounted aluminium profile for French Balcony	Page 170
EC-FB10-KIT	Caps Kit for side-mounted aluminium profile for French Balcony FB-10	Page 170

Table of uses

Standard/Use	*Glass*	*Height*	*Length*	*Glazing Kit*	*Anchoring*
CTE 1.6kN/m	L(2xTTG) PVB (e=13.52 mm)	H≤ 1100 mm	L≤ 1500 mm	PL-10 KIT (12.38-13.52)	FIS VS 300 T M8 HUS4-HR 8x75 HUS4-H 8x75 FAZ II M8X95

Public use

Informative Note: The choice of glass and glazingset depends on the regulations to be met. The published information on recommended systems, anchors, and glass does not take wind action into account. For any inquiries, please contact Technical Support.

GlassFit Flow

Profile Systems

GlassFit Flow

Profile Systems

Comenza's GlassFit Flow range comprises glass railing systems with profiles, designed to suit all types of construction solutions, whether top-mounted, side-mounted or inverted side mounting. With their clean lines and refined design, their profiles blend seamlessly into any architectural project. All systems are tested in accordance with CTE criteria, offering solutions appropriate for their use in private, public and crowd load areas. The profiles incorporate glazing systems that facilitate glass installation, as well as integrated LED lighting options and powder-coated finishes in a wide range of RAL colors.

Our Flow systems

Series	*Systems*	*Standards and use*						*Mounting*		
		CTE	Avis Technique	BS 6180:2011	NS 3510:2013	UNI 11578:2017	SS/EN 1090-3-1-4	Top	Side	Inverted side
SV-1400	SV-1401	Private use, Public use	Public use	Private use	Private use, Public use	Public use		●		
	SV-1402	Private use, Public use	Public use	Private use	Private use, Public use	Public use			●	
	SV-1403	Private use, Public use	Public use	Private use		Public use		●		
	SV-1404	Private use, Public use	Public use	Private use		Public use			●	
SV-1501	SV-1501	Private use						●		
SV-1602	SV-1602	Private use							●	●
SV-1700	SV-1701	Private use, Public use					Private use	●		
	SV-1702	Private use, Public use							●	●
	SV-1703	Private use, Public use						●		
	SV-1704	Private use, Public use							●	
SV-1800	SV-1801	Public use, Crowd load areas						●		
	SV-1801 RX		Crowd load areas					●		
	SV-1802	Public use, Crowd load areas	Crowd load areas						●	●
	SV-1803	Public use, Crowd load areas						●		

Private use Public use Crowd load areas

Mounting options

Top mount

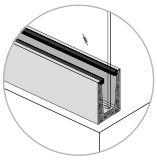

U-profile

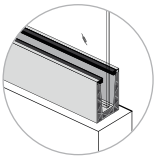

U-profile on wall

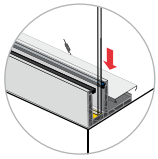

U-profile with flange (F-Channel profile)

Side mount

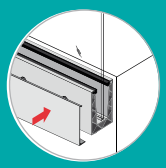

U-profile

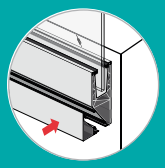

U-profile with flange
(Y-Channel profile)

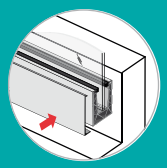

Inverted 'U' profile
(inverted side)

Manual alignment of glass railings:

Quick and easy to install

Comenza's R&D&I department has developed the Level-In system, an innovative device designed to make glass railing installation easier. This system overcomes the limitations of traditional fixed wedges, enabling fast, simple, cost-effective and safe glass levelling. Level-In saves installers time and money, thereby improving their competitiveness in the market.

Installation steps:

1. Glass levelling
2. Glass lock
3. Glass fixing

Levelling system for glass railings:

Easy and precise

At Comenza, we continue to innovate to make installers' work easier. With Level-In+, we have further enhanced our original Level-In levelling system, offering a more efficient solution that optimizes both installation time and costs for glass railing profile systems.

1. Glass levelling
2. Glass fixing

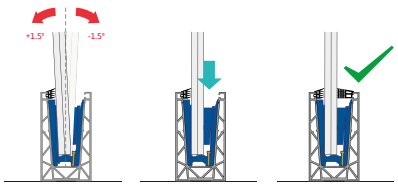

Level In+

Comenza RAL colours

At Comenza, we know that the finish of the railing plays an important role in the final result of any project, which is why we offer you a wide range of colours from the RAL chart, allowing you to customize your project and create its own distinctive identity.
In addition, we guarantee the highest quality throughout the powder-coating process, which is carried out in accordance with Qualicoat standards.

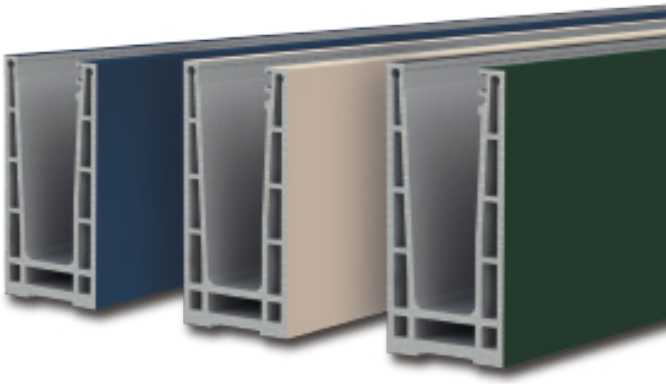

*Check delivery times.

LED System

LED lighting can be incorporated into Comenza's GlassFit Flow range of profile systems, adding an aesthetic touch that enhances any project.

This solution enhances both the railing and the surrounding space, creating a modern, visually striking effect without compromising safety or functionality.

Drainages

Proper drainage is essential to ensure the durability and performance of outdoor glass railing systems. GlassFit Flow systems are available with drainage options that prevent leaks, corrosion and water-related damage while preserving the appearance and functionality of the system. Two drainage configurations are available to suit the specific requirements of each project.

Incorporated drainage system:
The system drains water through 8 mm holes spaced every 500 mm along the profile, providing continuous and efficient drainage at a rate of 100.5 mm²/m.

Top/Side drainage system:
Aluminium components create a 5 mm gap to facilitate water drainage and can be stacked according to the installation requirements. As they are manufactured from the same material as the profile, they provide excellent corrosion resistance.

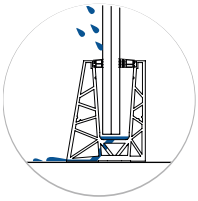

Incorporated drainage

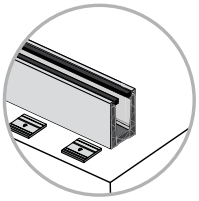

Top drainage system

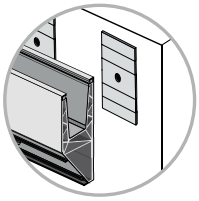

Side drainage system

Levelling shims

Comenza levelling shims quickly and accurately compensate for slab irregularities, ensuring correct installation.

Their design allows the profile to be levelled in two directions, ensuring proper seating. They improve the stability and structural performance of the system while reducing installation time without the need for additional tools.

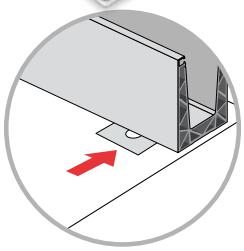

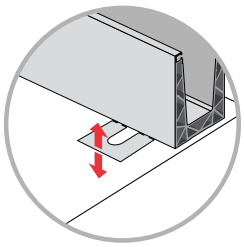

Shims

Profile trim

The TC-01 profile provides an elegant and discreet transition between the ventilated rainscreen façade and the glass railing. It is compatible with GlassFit Flow systems (SV-1602, SV-1702, SV-1703 and SV-1704), adapts to different façade materials and thicknesses, requires no adhesives for installation, and is available in a wide range of RAL colours.

1

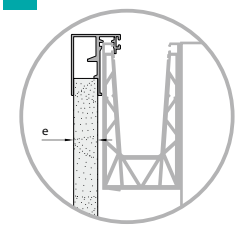

16mm ≤ e ≤ 19mm

2

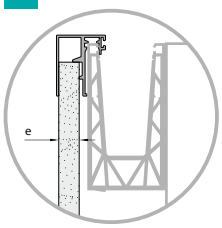

11mm ≤ e < 16mm

3

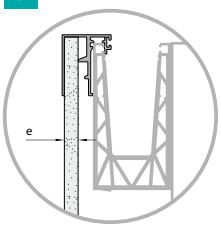

e < 11mm

Handrail options

There are several handrail options suitable for the GlassFit Flow railing systems. Comenza's variety of handrail brackets can be combined with round stainless steel tubes, square tubes, or slotted tubes.

RP-1400

RP-1410

SV-1255

SV-1260

ST-314

ST-315

GlassFit Flow

SV- 1401 Top/SV-1402 Side
SV-1403 Top/ SV-1404 Side

Glass railing systems with aluminium profiles designed for projects requiring broad compliance with international standards. Their refined design and clean lines allow them to integrate seamlessly into a wide range of construction solutions. The systems have been tested in accordance with multiple international standards and comply with the CTE requirements for private- and public-use areas. They incorporate the Level-In levelling system, enabling fast, simple and precise installation.

GlassFit Flow System
SV-1401 Top

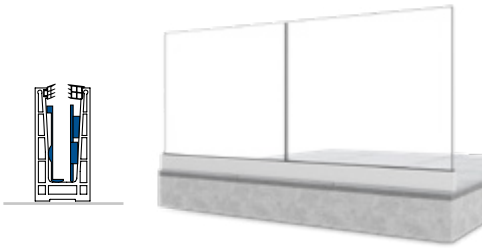

GlassFit Flow System
SV-1402 Side

GlassFit Flow System
SV-1403 Top

GlassFit Flow System
SV-1404 Side

GlassFit Flow SV-1401 Top

Profile System

Top mount glass railing system for international projects

The GlassFit SV-1401 system is a glass railing solution with a top-mounted aluminium profile, designed to comply with different international regulations. With a compression-resistant screed, it supports chemical or mechanical anchoring and it is compatible with the Level In system, which enables quick, easy and precise adjustment of the glass. The system complies with the CTE requirements for private and public use areas.

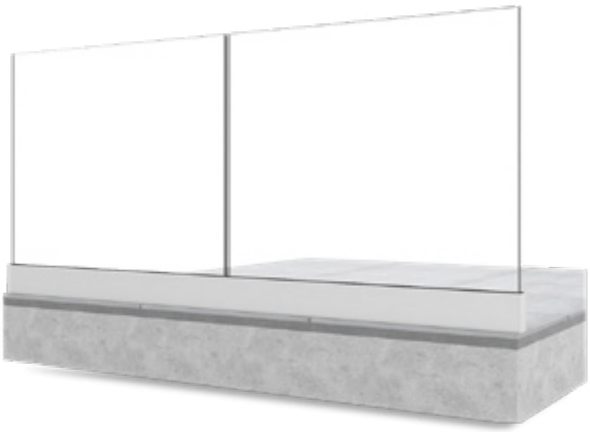

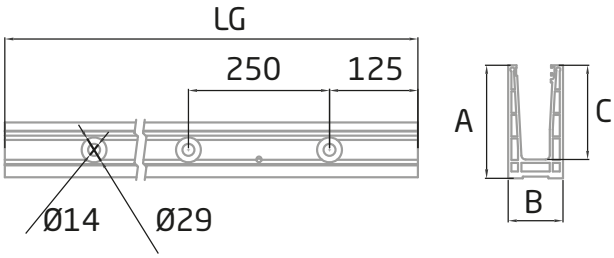

SV-1401

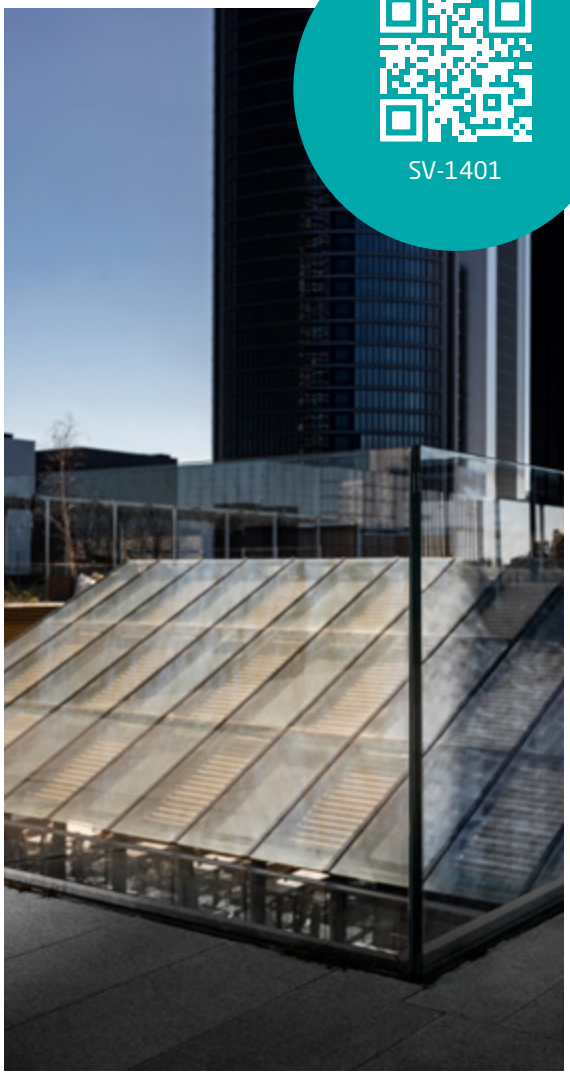

SV-1401

	LG	A	B	C
1	2500	132	64	110
1	5000	132	64	110

System components and accessories

Reference		Page
PM-01 AISI-316	Connection pin for GlassFit glass railing profiles	Page 172
PL-06	EPDM gasket for glass railing profiles	Page 172
MD-01	Glass mounting bracket for sloped railing profiles	Page 172
PM-02	Drainage profile for glass railing system GlassFit SV-1401	Page 173
PM-10	Aluminium side cap for glass railing profiles SV-1401	Page 173
PM-11	Aluminium side cap for glass railing profiles SV-1401	Page 173
SV-1401-C OUTSIDE	90° outside corner for glass railing system GlassFit SV-1401	Page 172
SV-1401-C INSIDE	90° inside corner for glass railing system GlassFit SV-1401	Page 172
GP-1401 E1	Levelling shims for profiles	Page 173
GP-1401 E2	Levelling shims for profiles	Page 173
PL-14	Level-In Kit with gaskets, shims and wedges for glass railing system	Page 172

Handrail options	RP-1400 - RP-1410 - SV-1255 - ST-314 - ST-315 - SV-1260

Table of uses

Standard/Use	Glass	Height	Glazing Kit	Anchoring
CTE 0.8kN/m	L (2xTTG) PVB (e=17.52 mm)	H≤ 1100 mm	PL-14 (17.52)-LG2500-KIT	FH II-S M8x105 FIS VS 300 T M12 HUS4-H 10x110 HUS4-HR 10x105
CTE 1.6kN/m	L (2xTTG) PVB (e=21.52)	H≤ 1100 mm	PL-14 (21.52)-LG2500-KIT	FIS VS 300 T M12

Standard/Use	Glass	Height	Length	Glazing Kit	Anchoring
Avis Technique 21/181794_V1 1kN/m	L(2xTTG)PVB (e=17.52mm)	H≤ 1000 mm	L≥ 500 mm L≤ 2500 mm	PL-14 (17.52)-LG2500-KIT	FIS VS 300 T M12 HUS4-H 10X110 HUS4-HR 10X105
	L(2xTTG)PVB (e=21.52mm)	H≤ 1100 mm	L≥ 500 mm L≤ 2500 mm	PL-14 (21.52)-LG2500-KIT	

Standard/Use	Glass	Height	Glazing Kit	Anchoring
BS 6180:2011 0.74kN/m	L(2xTTG)PVB (e=21.52mm)	H≤ 1100 mm	PL-14 (21.52)-LG2500-KIT	FIS VS 300 T M12

Standard/Use	Glass	Height	Glazing Kit	Anchoring
NS 3510:2015 1kN/m	L (2xTTG) PVB (e=17.52)	H≤ 1100 mm	PL-14 (17.52) -LG2500-KIT	FIS VS 300 T M12 HUS4-HR 10x105 HUS4-H 10x110
	L (2xTTG) PVB (e=21.52)	H≤ 1200 mm	PL-14 (21.52) -LG2500-KIT	
NS 3510:2015 1.5kN/m	L (2xTTG) PVB (e=21.52)	H≤ 1200 mm	PL-14 (21.52) -LG2500-KIT	FIS VS 300 T M12

Standard/Use	Glass	Height	Glazing Kit	Anchoring
UNI 11678:2017 2kN/m	L (2xTTG) PVB (e=21.52mm)	H≤ 1200 mm	PL-14 (21.52)-LG2500-KIT	FIS VS 300 T M12

Private use Public use

Informative Note: The choice of glass and glazingset depends on the regulations to be met. The published information on recommended systems, anchors, and glass does not take wind action into account. For any inquiries, please contact Technical Support.

GlassFit Flow SV-1402 Side

Profile System

Side mount glass railing system for private and public use areas

The GlassFit SV-1402 system is a side-mounted aluminum profile glass railing solution, with a non-structural screed of up to 15 mm. It complies with national regulations (for both public and private use) and international standards. It is compatible with the Level In system, which facilitates precise glass adjustment.

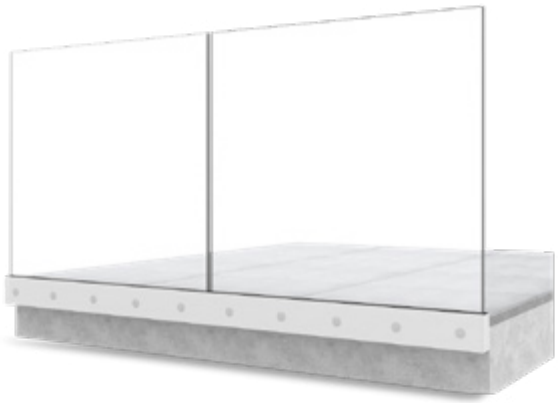

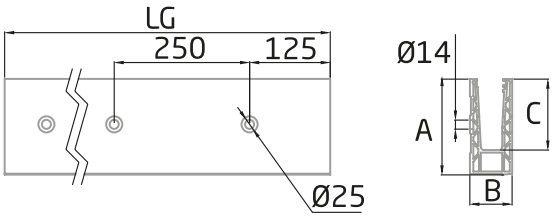

SV-1402

	LG	A	B	C
1	2500	147	65.5	110
1	5000	147	65.5	110

SV-1402

System components and accessories

Reference		Page
PM-01 AISI-316	Connection pin for GlassFit glass railing profiles	Page 172
PL-06	EPDM gasket for glass railing profiles	Page 172
SV-1402-C OUTSIDE	90° outside corner for glass railing system SV-1402	Page 174
SV-1402-C INSIDE	90° inside corner for glass railing system SV-1402	Page 174
PM-12	Aluminium side cap for straight sections for glass railing profiles SV-1402	Page 174
PM-13	Aluminium side cap for staircase sections for glass railing profiles SV-1402	Page 174
MD-01	Glass mounting bracket for sloped railing profiles	Page 172
PM-55	Aluminium front cover for SV-1402 glass railing system	Page 175
PM-56	Stainless still front cover for SV-1402 glass railing system	Page 175
DP-1402-1	Drainage profile for glass railing system GlassFit SV-1402	Page 174
TF-580 LDPE	Plastic cap for glass railing profile	Page 174
PL-14	Level-In Kit with gaskets, shims and wedges for glass railing system	Page 172

Handrail options	RP-1400 - RP-1410 - SV-1255 - ST-314 - ST-315 - SV-1260

Table of uses

Standard/Use	Glass	Height	Glazing Kit	Anchoring
CTE 0.8kN/m	L (2xTTG) PVB (e=17.52 mm)	H≤ 1100 mm	PL-14 (17,52)-LG2500-KIT	FH II-S M8X105 (B.12) FIS VS 300 T M10 (DIN-439)
CTE 1.6kN/m	L (2xTTG) PVB (e=21.52 mm)	H≤ 1100 mm	PL-14 (21.52)-LG2500-KIT	FH II-S M8X105 (B.12) FIS VS 300 T M10 (DIN-439)

Standard/Use	Glass	Height	Length	Glazing Kit	Anchoring
Avis Technique 1kN/m	L (2xTTG) PVB (e=21.52 mm)	H≤ 1100 mm	L≥ 500 mm L≤ 2500 mm	PL-14 (21.52)-LG2500-KIT	FH II-S M8X105 (B.12)

Standard/Use	Glass	Height	Glazing Kit	Anchoring
BS 0,74kN/m	L(2xTTG)PVB (e=21.52 mm)	H≤ 1100 mm	PL-14 (21.52)-LG2500-KIT	FH II-S M8X105 (B.12) FIS VS 300 T M10 (DIN-439)

Standard/Use	Glass	Height	Glazing Kit	Anchoring
NS 1kN/m	L (2xTTG) PVB (e=17.52 mm)	H≤ 1000 mm	PL-14 (17.52) -LG2500-KIT	FIS VS 300 T M10 (DIN-439)
	L (2xTTG) PVB (e=21.52 mm)	H≤ 1200 mm	PL-14 (21.52) -LG2500-KIT	
NS 1.5kN/m	L (2xTTG) PVB (e=21.52 mm)	H≤ 1000 mm	PL-14 (21.52) -LG2500-KIT	FIS VS 300 T M10 (DIN-439)

Standard/Use	Glass	Height	Glazing Kit	Anchoring
UNI 2kN/m	L (2xTTG) PVB (e=21.52 mm)	H≤ 1200 mm	PL-14 (21.52)-LG2500-KIT	FIS VS 300 T M10 (DIN-439)

Private use Public use

Informative Note: The choice of glass and glazingset depends on the regulations to be met. The published information on recommended systems, anchors, and glass does not take wind action into account. For any inquiries, please contact Technical Support.

GlassFit Flow SV-1403 Top

Profile system

Top mount glass railing system for projects with screeds

The GlassFit SV-1403 system is a glass railing system with a top-mounted aluminium profile, designed to suit a wide range of construction configurations, such as waterproofing. It can be installed at the edge of the floor slab and in solutions with screeds, allowing seamless integration into a variety of projects. The system features an internal glass fixing system that eliminates the need for drilling and is compatible with the Level-In system, ensuring a more efficient installation process. The system complies with the CTE requirements for private and public use areas.

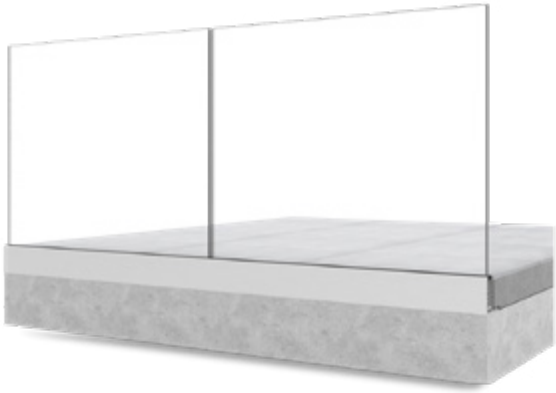

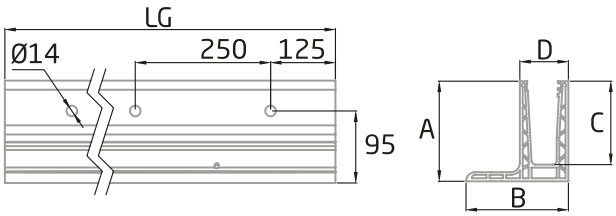

SV-1403

	LG	A	B	C	D
1	2500	132	135	110	64
1	5000	132	135	110	64

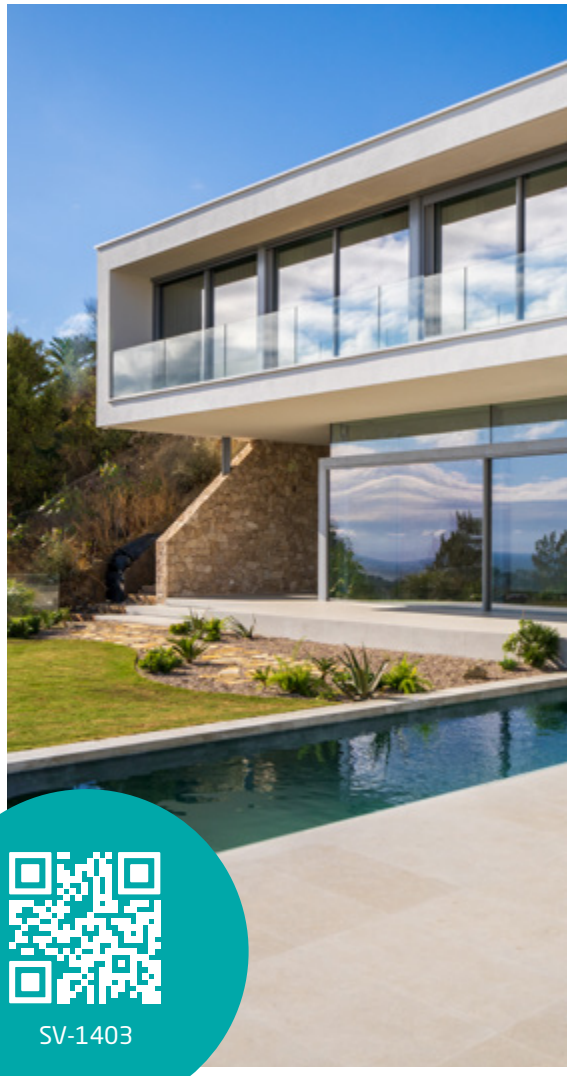

SV-1403

System components and accessories

Reference		Page
PM-01 AISI-316	Connection pin for GlassFit glass railing profiles	Page 172
PL-06	EPDM gasket for glass railing profiles	Page 172
MD-01	Glass mounting bracket for sloped railing profiles	Page 172
PM-16	Aluminium side cap for straight sections for glass railing profiles SV-1403	Page 175
PM-17	Aluminium side cap for straight sections for glass railing profiles GlassFit SV-1403	Page 175
SV-1403-C OUTSIDE	90° outside corner for glass railing system GlassFit SV-1403	Page 175
SV-1403-C INSIDE	90° inside corner for glass railing system GlassFit SV-1403	Page 175
PL-14	Level-In Kit with gaskets, shims and wedges for glass railing system	Page 172

Handrail options	RP-1400 - RP-1410 - SV-1255 - ST-314 - ST-315 - SV-1260

Table of uses

Standard/Use	Glass	Height	Glazing Kit	Anchoring
CTE 0.8kN/m	L (2xTTG) PVB (e=17.52mm)	H≤ 1100 mm	PL-14 (17.52)-LG2500-KIT	FAZ II M12X120 FIS VS 300 T M10 FBN II M12X116
CTE 1.6kN/m	L (2xTTG) PVB (e=21.52)	H≤ 1100 mm	PL-14 (21.52)-LG2500-KIT	FAZ II M12X120 FIS VS 300 T M10 FBN II M12X116

Standard/Use	Glass	Height	Length	Glazing Kit	Anchoring
Avis Technique 1kN/m	L(2xTTG)PVB (e=21.52mm)	H≤ 1258 mm *	L≥ 500 mm L≤ 2500 mm	PL-14 21.52)-LG2500-KIT	FAZ II M12X120 FIS VS 300 T M10

Standard/Use	Glass	Height	Glazing Kit	Anchoring
BS 0.74kN/m	L(2xTTG)PVB (e=21.52mm)	H≤ 1100 mm	PL-14 (21.52)-LG2500-KIT	FIS VS 300 T M10

Standard/Use	Glass	Height	Glazing Kit	Anchoring
UNI 2kN/m	L (2xTTG) PVB (e=21.52mm)	H≤ 1332 mm *	PL-14 (21.52)-LG2500-KIT	FIS VS 300 T M12

Private use Public use

*Measured from the base of the profile

Informative Note: The choice of glass and glazingset depends on the regulations to be met. The published information on recommended systems, anchors, and glass does not take wind action into account. For any inquiries, please contact Technical Support.

GlassFit Flow SV-1404 Side

Profile system

Side mount glass railing system suitable for a variety of projects

The GlassFit SV-1404 system is a glass railing system with a side-mounted aluminium profile, designed to comply with a wide range of international standards and suit different construction configurations. It can be installed at the edge of the floor slab and in installations with screeds, allowing seamless integration into a variety of projects. The system features an internal glass fixing system and is compatible with the Level-In system, ensuring a more efficient installation process. The system complies with the CTE requirements for private and public use areas.

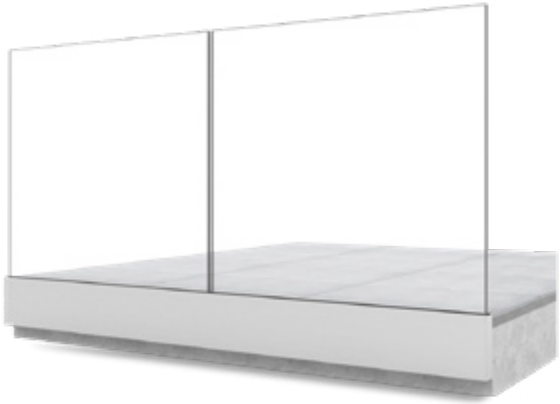

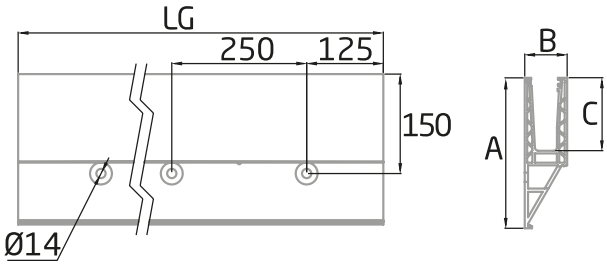

SV-1404

	LG	A	B	C
1	2500	227	64	110
1	5000	227	64	110

System components and accessories

Reference		Page
PM-01 AISI-316	Connection pin for GlassFit glass railing profiles	Page 172
PL-06	EPDM gasket for glass railing profiles	Page 172
PM-14	Aluminium side cap for straight sections for glass railing profiles SV-1404	Page 176
PM-15	Aluminium side cap for staircase sections for glass railing profiles SV-1404	Page 176
MD-01	Glass mounting bracket for sloped railing profiles	Page 172
PM-57	Aluminium front cover for GlassFit SV-1404 glass railing system	Page 176
SV-1404-C OUTSIDE	90° outside corner for glass railing system GlassFit SV-1404	Page 176
SV-1404-C INSIDE	90° inside corner for glass railing system GlassFit SV-1404	Page 176
PL-14	Level-In Kit with gaskets, shims and wedges for glass railing system	Page 172

Handrail options	RP-1400 - RP-1410 - SV-1255 - ST-314 - ST-315 - SV-1260

Table of uses

Standard/Use	Glass	Height	Glazing Kit	Anchoring
CTE 0.8kN/m	L (2xTTG) PVB (e=17.52mm)	H≤ 1100 mm	PL-14 KIT (17.52)-LG2500-KIT	FAZ II M12X120 FIS VS 300 T M10
CTE 1.6kN/m	L (2xTTG) PVB (e=21.52)	H≤ 1100 mm	PL-14 (21.52)-LG2500-KIT	FAZ II M12X120 FIS VS 300 T M10

Standard/Use	Glass	Height	Length	Glazing Kit	Anchoring
Avis Technique 1kN/m	L(2xTTG)PVB (e=21.52mm)	H≤ 1100 mm	L≥ 500 mm L≤ 2500 mm	PL-14 (21.52)-LG2500-KIT	FAZ II M12X120 FIS VS 300 T M10

Standard/Use	Glass	Height	Glazing Kit	Anchoring
BS 6180:2011 0.74kN/m	L(2xTTG)PVB (e=21.52mm)	H≤ 1100 mm	PL-14 (21.52)-LG2500-KIT	FIS VS 300 T M12

Standard/Use	Glass	Height	Glazing Kit	Anchoring
UNI 11678:2017 2kN/m	L (2xTTG) PVB (e=21.52mm)	H≤ 1200 mm	PL-14 (21.52)-LG2500-KIT	FIS VS 300 T M12

Private use Public use

Informative Note: The choice of glass and glazingset depends on the regulations to be met. The published information on recommended systems, anchors, and glass does not take wind action into account. For any inquiries, please contact Technical Support.

GlassFit Flow

SV-1501 Top

Glass railing solution for low walls

Top-mount glass railing system suitable for light-load installations, and due to its dimensions and design, it is the ideal choice to be placed on low walls. The system has been tested in accordance with Spanish regulations and is suitable for private use. It is also compatible with integrated LED lighting to enhance both ambience and wayfinding.

SV-1501

Sistema GlassFit Flow

SV-1501 Top

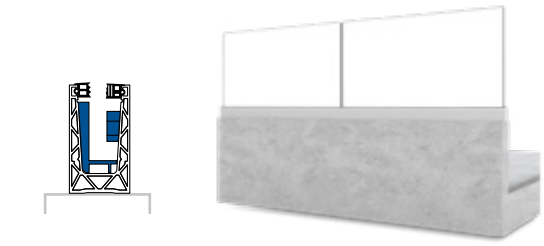

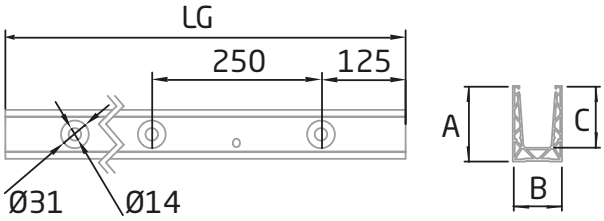

SV-1501

	LG	A	B	C
1	2500	85	55	69.5
1	5000	85	55	69.5

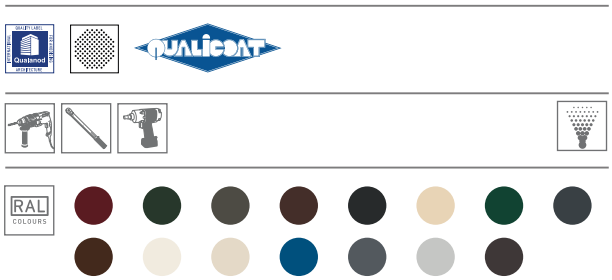

System components and accessories

Reference		Page
PM-01 AISI-316	Connection pin for GlassFit glass railing profiles	Page 172
PL-06	EPDM gasket for glass railing profiles	Page 172
EC-1501-1	Horizontal end cap for glass railing profile GlassFit SV-1501	Page 177
EC-1501-2	Staircase end cap for glass railing profile GlassFit SV-1501	Page 177
LED STRIP	LED/LED connectors	Page 196
PL-150 KIT	Kit with gaskets, shims and wedges for GlassFit SV-1501 glass railing system	Page 176

Handrail options	RP-1400 - RP-1410 - SV-1255 - SV-1260 - ST-314 - ST-315

Table of uses

Standard/Use	Glass	Height	Glazing Kit	Anchoring
CTE 0.8kN/m	L(2xTTG) PVB (e=12.76mm)	H≤ 700 mm	PL-150 KIT (12.38-12.76) -LG2500	FIS VS 300 T M10 HUS4-H 10X110 HUS4-HR 10X105
	L(2xANG) PVB (e=16.76mm)	H≤ 700 mm	PL-150 KIT (16.38-16.76) -LG2500	

Private use

Informative Note: The choice of glass and glazingset depends on the regulations to be met. The published information on recommended systems, anchors, and glass does not take wind action into account. For any inquiries, please contact Technical Support.

GlassFit Flow

SV-1602 Side

Lightweight and versatile side-mount glass railing system

The GlassFit SV-1602 system is a glass railing system with a side-mounted anodized aluminium profile, designed for private areas requiring a functional, lightweight and efficient solution. Its optimized profile reduces the weight of the system, optimizing costs and facilitating installation. With this system, the profile is concealed from the inside, preserving the aesthetic value of the structure and its usable surface. It allows for different installation configurations, including side-mounted and inverted installation, and is compatible with the Level In+ system for precise adjustment. The system complies with the requirements of the CTE for private-use areas.

SV-1602

GlassFit Flow System

SV-1602 Side

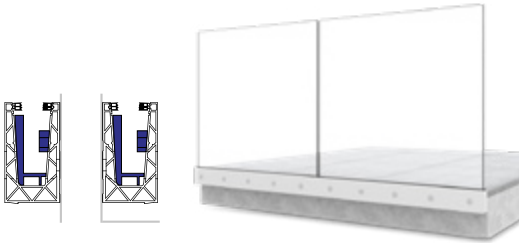

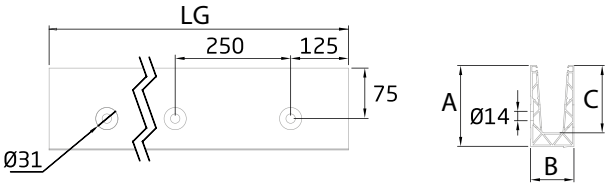

SV-1602

	LG	A	B	C
1	2500	120	68.5	100
1	5000	120	68.5	100

LEVEL-IN+ Levelling system

Our new LEVEL-IN+ system allows the glass to be levelled and fixed from the inside, in a simple, quick and safe manner, ensuring that the railing is perfectly levelled and securely fixed.

System components and accessories

Reference		Page
PM-01 AISI-316	Connection pin for GlassFit glass railing profiles	Page 172
PL-06	EPDM gasket for glass railing profiles	Page 172
EC-1602-1	Horizontal end cap with no cladding for glass railing profile	Page 179
EC-1602-2	Staircase end cap with no cladding for glass railing profile	Page 180
EC-1602-3	Horizontal end cap for glass railing profile with cladding CL-1602-1	Page 180
EC-1602-4	Staircase end cap for glass railing profile with cladding CL-1602-1	Page 180
SV-1602-C OUTSIDE	90° outside corner for glass railing system	Page 179
SV-1602-C INSIDE	90° inside corner for glass railing system	Page 179
CL-1602-1	Cladding for glass railing system	Page 180
TF-580 LDPE	Plastic cap for glass railing profile	Page 174
TC-01	Aluminium profile trim for glass railing system	Page 180
LED STRIP	LED/LED connectors	Page 196
PL-170 KIT	Kit with gaskets, shims and wedges for glass railing system	Page 177
PL-170 KIT-S	Special kit with gaskets, shims and wedges for glass railing system	Page 177
PL-170 IC KIT	Kit with gaskets, shims and wedges for inverted mounting of glass railing system	Page 177
PL-170 LEVEL-IN+	Level-In Kit with gaskets, shims and wedges for glass railing system	Page 177

Opciones de pasamanos	RP-1400 - RP-1410 - SV-1255 - ST-314 - ST-315 - SV-1260

Table of uses

Standard/Use	Glass	Height	Glazing Kit	Anchoring
CTE 0.8kN/m	L(2xTTG) PVB (e=12.76mm)	H≤ 1100 mm	PL-170 KIT (12.38-12.76) -LG2500	HUS4-H 10X110 HUS4-HR 10x105 FIS VS 300 T M10
	L(2xTTG) PVB (e=16.76mm)	H≤ 1100 mm	PL-170 IC KIT (16.38-16.76) -LG2500	
	L(2xTTG) PVB (e=17.52mm)	H≤ 1100 mm	PL-170 KIT (17.52) -LG2500 PL-170 KIT (17.52) -LG25m PL-170 LEVEL-IN+ KIT (17.52) -LG2500	
	L (2xANG) PVB (e=20.76mm)	H≤ 1100 mm	PL-170 KIT (20.38-20.76)-LG2500 PL-170 KIT (20.38-20.76)-LG25m PL-170 PT KIT (20.38-20.76)-LG2500	

Private use

Informative Note: The choice of glass and glazingset depends on the regulations to be met. The published information on recommended systems, anchors, and glass does not take wind action into account. For any inquiries, please contact Technical Support.

GlassFit Flow

SV-1701 Top/ SV-1702 Side/ SV-1703 Top
SV-1704 Side/ SV-1705 Fit In

Glass railing systems with profiles designed to provide efficient and versatile solutions on site. Their optimized profiles reduce the weight of the system and enable faster, more cost-effective installation, while maintaining a clean and functional appearance. The systems are tested in accordance with CTE requirements and are suitable for both private and public use areas. They feature the Level In+ levelling system, delivering greater accuracy and reducing installation time.

GlassFit Flow System
SV-1701 Top

GlassFit Flow System
SV-1702 Side

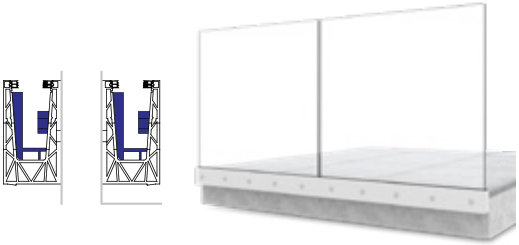

GlassFit Flow System
SV-1703 Top

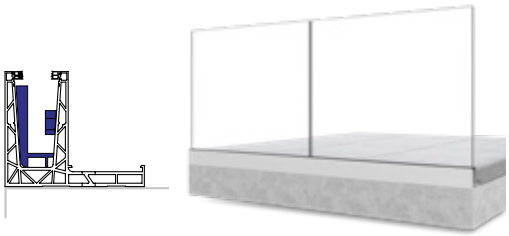

GlassFit Flow System
SV-1704 Side

GlassFit Flow SV-1701 Top

Profile System

Top mount glass railing system with profile and easy installation

The GlassFit SV-1701 system is a glass railing solution with an anodized aluminium profile, designed to provide a functional and efficient system. Its configuration enables fast, straightforward installation, reducing installation time on site. It is compatible with the Level In+ levelling and fixing system, which allows for the precise glass adjustment and alignment. In addition, the system is compatible with integrated LED lighting and is available with a powder-coated finish in a wide range of RAL colours, adapting to the requirements of different projects. The system complies with the CTE requirements for private and public use areas.

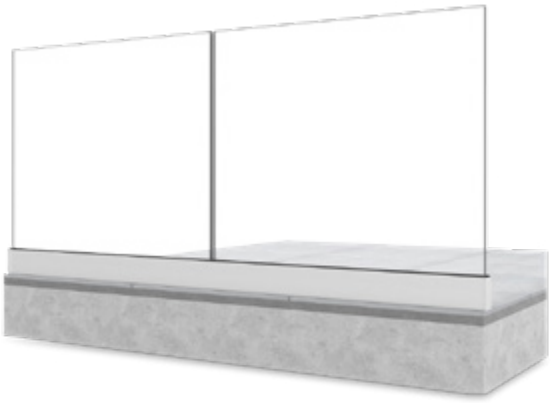

LEVEL-IN+ levelling system

Our new LEVEL-IN+ system allows the glass to be levelled and fixed from the inside of the installation, in a simple, quick and safe manner, ensuring precise levelling and secure fixing.

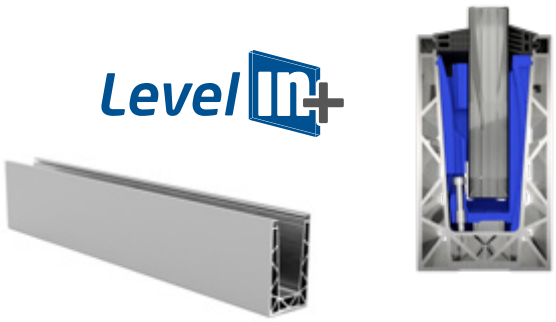

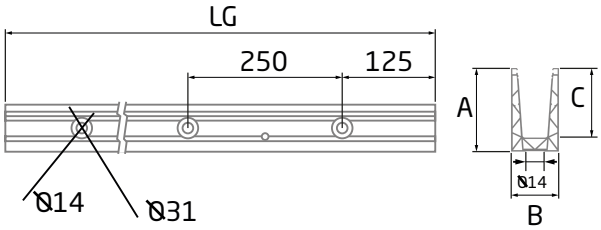

SV-1701

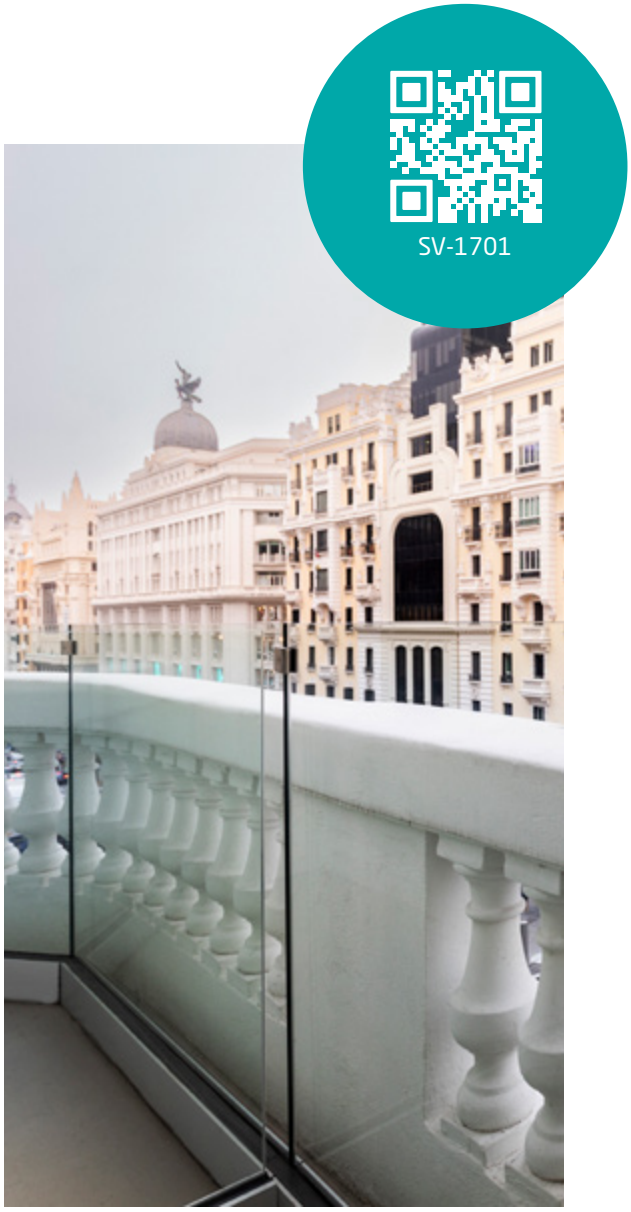

SV-1701

	LG	A	B	C
1	2500	120	68	100
1	5000	120	68	100

System components and accessories

Reference		Page
PM-01 AISI-316	Connection pin for GlassFit glass railing profiles	Page 172
PL-06	EPDM gasket for glass railing profiles	Page 172
EC-1701-1	Horizontal end cap for glass railing profile GlassFit SV-1701	Page 178
EC-1701-2	Staircase end cap for glass railing profile GlassFit SV-1701	Page 179
DP-1701-1	Drainage profile for glass railing system GlassFit SV-1701	Page 179
MD-02 L	Left glass mounting bracket for sloped railing profiles	Page 178
MD-02 R	Right glass mounting bracket for sloped railing profiles	Page 178
SV-1701-C INSIDE/OUTSIDE	90° inside/outside corner for glass railing system GlassFit SV-1701	Page 178
GP-1701 E1	Levelling shim for profiles of GlassFit SV-1701 glass railing	Page 178
GP-1701 E2	Levelling shim for profiles of GlassFit SV-1701 glass railing	Page 178
LED STRIP	LED/LED connectors	Page 196
PL-170 KIT	Kit with gaskets, shims and wedges for glass railing system	Page 177
PL-170 Level-in+	Level-In+ Kit with gaskets, shims and wedges for glass railing system	Page 177

Handrail options	RP-1400 - RP-1410 - SV-1255 - ST-314 - ST-315 - SV-1260

Table of uses

Standard/Use	Glass	Height	Glazing Kit	Anchoring
CTE 0.8kN/m	L(2xTTG) PVB (e=12.76mm)	H≤ 1100 mm	PL-170 KIT (12.38-12.76)-LG2500	HUS4-HR 10x105 HUS4-H 10x110 FIS VS 300 T M10 FIS VS 300 T M12
	L(2xANG) PVB (e=16.76mm)	H≤ 1100 mm	PL-170 KIT-S (16.38-16.76)-LG2500	
	L(2xANG) DG-41 (e=16.76mm)	H≤ 1100 mm	PL-170 KIT (16.38-16.76)-LG2500	
	L(2xTTG) PVB (e=17.52mm)	H≤ 1100 mm	PL-170 KIT (17.52)-LG2500 PL-170 LEVEL-IN KIT (17.52)-LG2500	
	L (2xANG) PVB (e=20.76mm)	H≤ 1100 mm	PL-170 KIT (20.38-20.76)-LG2500 PL-170 LEVEL-IN KIT (20.38-20.76)-LG2500	
CTE 1.6kN/m	L (2xTTG) PVB (e=17.52)	H≤ 1100 mm	PL-170 KIT (17.52)-LG25M PL-170 KIT (17.52)-LG2500 PL-170 LEVEL-IN+ KIT (17.52)-LG2500	FIS VS 300 T M12
	(2xANG) DG-41 (e=20.76)	H≤ 1100 mm	PL-170 KIT-S (20.38-20.76)-LG2500	
	(2xTTG) PVB (e=21.52)	H≤ 1100 mm	PL-170 KIT (21.52)-LG25M PL-170 KIT (21.52)-LG2500 PL-170 LEVEL-IN+ KIT (21.52)-LG2500	

Standard/Use	Glass	Height	Glazing Kit	Anchoring
SS/EN 0.8kN/m	L (2xTTG) PVB (e=12.76mm)	H≤ 1100 mm	PL-170 KIT (12.38-12.76)-LG2500	HUS4-HR 10x105 HUS4-H 10x110 FIS VS 300 T M10 FIS VS 300 T M12

Private use Public use

Informative Note: The choice of glass and glazingset depends on the regulations to be met. The published information on recommended systems, anchors, and glass does not take wind action into account. For any inquiries, please contact Technical Support.

GlassFit Flow SV-1702 Side

Profile System

Side mount glass railing system featuring profile designed to maximize space

The GlassFit SV-1702 system is a glass railing system with a side-mounted anodized aluminium profile, designed to maximize available space and facilitate on-site installation. Its configuration enables fast installation without the need to drill the glass, improving installation efficiency. It is compatible with the Level In+ levelling and fixing system, allowing precise glass adjustment and alignment. In addition, the system is available with a powder-coated finish in a wide range of RAL colours, adapting to the requirements of different projects. The system complies with the CTE requirements for private and public use areas.

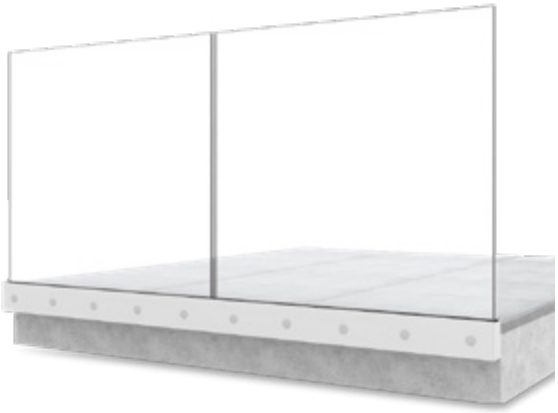

LEVEL-IN+ levelling system

Our new LEVEL-IN+ system allows the glass to be levelled and fixed from the inside of the installation, in a simple, quick and safe manner, ensuring that the railing is perfectly levelled and securely fixed.

SV-1702

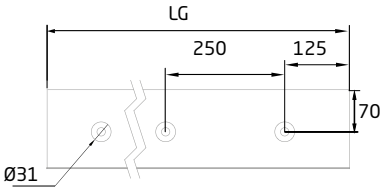

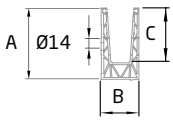

SV-1702

	LG	A	B	C
1	2500	130	69.5	100
1	5000	130	69.5	100

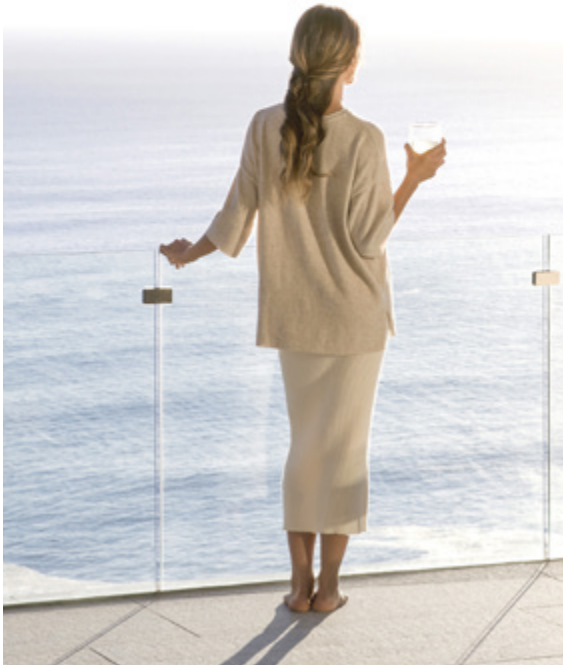

System components and accessories

Reference		Page
PM-01 AISI-316	Connection pin for GlassFit glass railing profiles	Page 172
PL-06	EPDM gasket for glass railing profiles	Page 172
MD-02 L	Left glass mounting bracket for sloped railing profiles	Page 178
MD-02 R	Right glass mounting bracket for sloped railing profiles	Page 178
SV-1702-C OUTSIDE	90° outside corner for glass railing system	Page 180
SV-1702-C INSIDE	90° inside corner for glass railing system	Page 181
EC-1702-1	Horizontal end cap with no cladding for glass railing profile	Page 181
EC-1702-2	Staircase end cap with no cladding for glass railing profile	Page 181
EC-1702-3	Horizontal end cap for glass railing profile with cladding CL-1702-1	Page 181
EC-1702-4	Staircase end cap for glass railing profile with cladding CL-1702-1	Page 181
DP-01	Drainage profile for glass railing system	Page 179
CL-1702-1	Cladding for glass railing system	Page 181
TF-580 LDPE	Plastic cap for GlassFit glass railing profile	Page 174
TC-01	Aluminium profile trim for glass railing system	Page 180
PL-170 KIT	Kit with gaskets, shims and wedges for glass railing system	Page 177
PL-170 KIT-S	Special kit with gaskets, shims and wedges for glass railing system	Page 177
PL-170 PT KIT	Kit with gaskets, shims and wedges for profile trim for glass railing system	Page 177
PL-170 PT KIT-S	Special kit with gaskets, shims and wedges for profile trim for glass railing system	Page 177
PL-170 IC KIT	Kit with gaskets, shims and wedges for inverted mounting of glass railing system	Page 177
PL-170 IC KIT-S	Special kit with gaskets, shims and wedges for inverted mounting of glass railing system	Page 177
PL-170 LEVEL-IN+	Level-In+ Kit with gaskets, shims and wedges for glass railing system	Page 177
LED STRIP	LED/LED connectors	Page 196
Handrail options	RP-1400 - RP-1410 - SV-1255 - ST-314 - ST-315 - SV-1260	

Table of uses

Standard/Use	Glass	Height	Glazing Kit	Anchoring
CTE 0.8kN/m	L (2xTTG) PVB (e=16.76mm)	H≤ 1100 mm	PL-170 IC KIT (16.38-16.76)-LG2500	FIS VS 300 T M10
	L (2xTTG) PVB (e=17.52mm)	H≤ 1100 mm	PL-170 KIT (16.38-16.76)-LG2500 PL-170 LEVEL-IN+ KIT (17.52)-LG2500 PL-170 KIT (17.52)-LG2500	
	L (2xANG) PVB (e=20.76mm)	H≤ 1100 mm	PL-170 LEVEL-IN+ KIT (20.38-20.76)-LG2500	
CTE 1.6kN/m	L (2XTTG) PVB (e:17.52)	H≤ 1100 mm	PL-170 LEVEL-IN+ KIT (17.52)- LG2500 PL-170 KIT (17.52)-LG25M PL-170 KIT (17.52)-LG2500	HUS4-HR 10x105 HUS4-H 10x110 FIS VS 300 T M12
	L (2xANG) DG-41 (e=20.76)	H≤ 1100 mm	PL-170 KIT-S (20.38-20.76)-LG2500 PL-170 IC KIT-S (20.38-20.76) PL-170 LEVEL-IN+ KIT (20.38-20.76)	
	L (2xTTG) PVB (e=21.52)	H≤ 1100 mm	PL-170 KIT (21.52)-LG2500 PL-170 PT KIT (21.52)-LG2500 PL-170 IC KIT (21.52)-LG2500 PL-170 KIT (21.52)-LG25M PL-170 LEVEL-IN+ KIT (21.52)-LG2500	

Private use Public use

Informative Note: The choice of glass and glazingset depends on the regulations to be met. The published information on recommended systems, anchors, and glass does not take wind action into account. For any inquiries, please contact Technical Support.

GlassFit Flow SV-1703 Top

Profile System

Top mount glass railing system that maximizes usable space

The GlassFit SV-1703 system is a glass railing system with a top-mounted anodized aluminium profile, designed to optimize cantilevered installations and maximize the usable space of the project. It can be installed flush with the floor slab or in a cantilevered configuration, adapting to different architectural configurations. It is compatible with the Level In+ levelling system and ventilated rainscreen systems, ensuring seamless integration and concealing anchors. The system incorporates levelling systems that enable precise glass alignment and efficient installation. The system complies with the CTE requirements for private and public use areas.

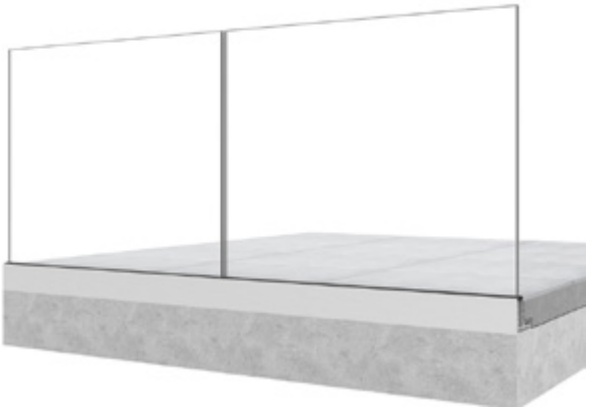

LEVEL-IN+ levelling system

Our new LEVEL-IN+ system allows the glass to be levelled and fixed from the inside of the installation, in a simple, quick and safe manner, ensuring that the railing is perfectly levelled and securely fixed.

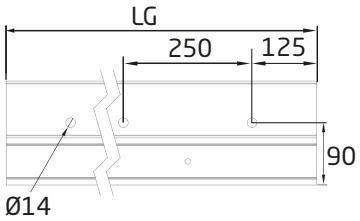

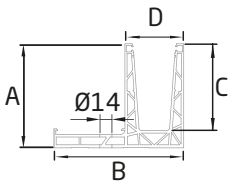

SV-1703

	LG	A	B	C	D
1	2500	120	150	100	68
1	5000	120	150	100	68

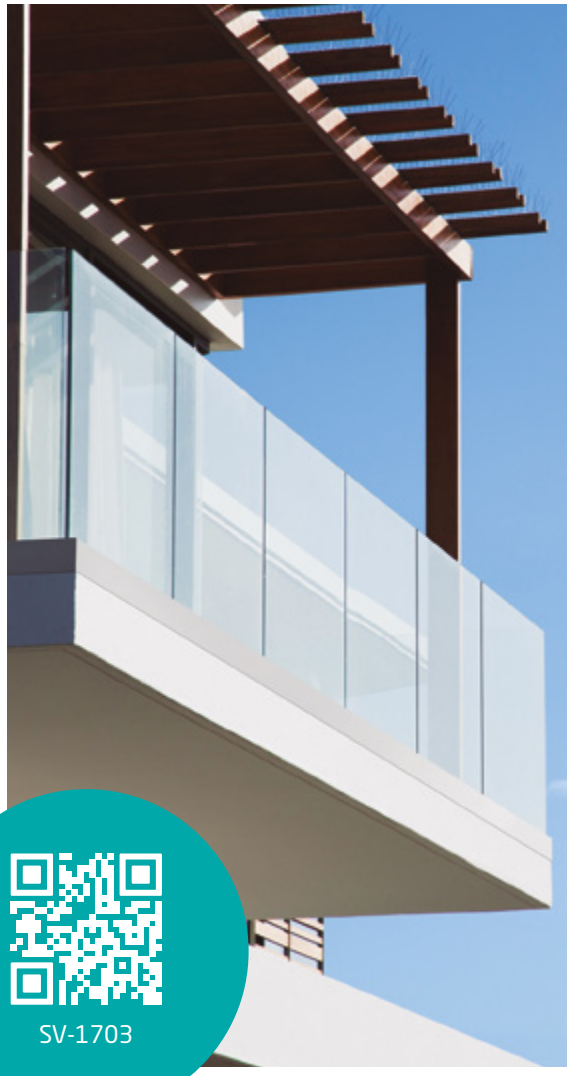

SV-1703

System components and accessories

Reference		Page
PM-01 AISI-316	Connection pin for GlassFit glass railing profiles	Page 172
PL-06	EPDM gasket for glass railing profiles	Page 172
MD-02 L	Left glass mounting bracket for sloped railing profiles	Page 178
MD-02 R	Right glass mounting bracket for sloped railing profiles	Page 178
SV-1703-C OUTSIDE	90° outside corner for glass railing system	Page 182
SV-1703-C INSIDE	90° inside corner for glass railing system	Page 182
EC-1703-1	Horizontal right end cap for glass railing profile	Page 182
EC-1703-2	Staircase right end cap for glass railing profile	Page 182
EC-1703-3	Horizontal left end cap for glass railing profile	Page 182
EC-1703-4	Staircase left end cap for glass railing profile	Page 182
DP-03	Drainage profile for glass railing system	Page 183
CL-1703-1	Cladding for glass railing system	Page 183
TC-01	Aluminium profile trim for glass railing system	Page 180
PL-170 KIT	Kit with gaskets, shims and wedges for glass railing system	Page 177
PL-170 KIT-S	Special kit with gaskets, shims and wedges for glass railing system	Page 177
PL-170 PT KIT	Kit with gaskets, shims and wedges for profile trim for glass railing system	Page 177
PL-170 PT KIT-S	Special kit with gaskets, shims and wedges for profile trim for glass railing system	Page 177
PL-170 LEVEL-IN+	Level-In+ Kit with gaskets, shims and wedges for glass railing system	Page 177
LED STRIP	LED/LED connectors	Page 196

Handrail options	RP-1400 - RP-1410 - SV-1255 - ST-314 - ST-315 - SV-1260

Table of uses

Standard/Use	Glass	Height	Glazing Kit	Anchoring
CTE 0.8kN/m	L (2xTTG) PVB (e=12.76mm)	H≤ 1100 mm	PL-170 KIT (12.38-12.76)-LG2500	FAZ II M12 FIS VS 300 T M10 FIS VS 300 T M12
	L (2xTTG) PVB (e=17.52mm)	H≤ 1100 mm	PL-170 KIT (17.52)-LG2500 PL-170 PT KIT (17.52)-LG2500 PL-170 LEVEL-IN+ KIT (17.52)-LG2500	
	L (2xANG) PVB (e=20.76mm)	H≤ 1100 mm	PL-170 KIT (20.38-20.76)-LG2500 PL-170 PT KIT (20.38-20.76)-LG2500 PL-170 LEVEL-IN+ KIT (20.38-20.76)-LG2500 PL-170 KIT (20.38-20.76)-LG25m	
CTE 1.6kN/m	L (2xTTG) PVB (e=17.52)	H≤ 1100 mm	PL-170 KIT (17.52)-LG25M PL-170 KIT (17.52)-LG2500 PL-170 LEVEL-IN+ KIT (17.52)	FAZ II M12 FIS VS 300 T M12 FIS VS 300 T M10
	L (2xANG) DG-41 (e=20.76)	H≤ 1100 mm	PL-170 KIT-S (20.38-20.76)-LG2500 PL-170 PT KIT-S (20.38-20.76)-LG2500	
	L (2xTTG) PVB (e=21.52)	H≤ 1100 mm	PL-170 KIT (21.52)-LG25M PL-170 KIT (21.52)-LG2500 PL-170 PT KIT (21.52)-LG2500 PL-170 LEVEL-IN+ KIT (21.52)-LG2500	

Private use Public use

Informative Note: The choice of glass and glazingset depends on the regulations to be met. The published information on recommended systems, anchors, and glass does not take wind action into account. For any inquiries, please contact Technical Support.

GlassFit Flow SV-1704 Side

Profile System

Functional and versatile glass railing system

The GlassFit SV-1704 system is a glass railing system with a side-mounted anodized aluminium profile, designed to provide an efficient installation solution and suit a variety of architectural requirements. Its configuration allows the glass to be secured quickly using wedges, shims and gaskets, without the need to drill, speeding up installation and reducing on-site costs. Its optimized design reduces the weight of the profile and facilitates its integration into a variety projects. The system complies with the CTE requirements for private and public use areas.

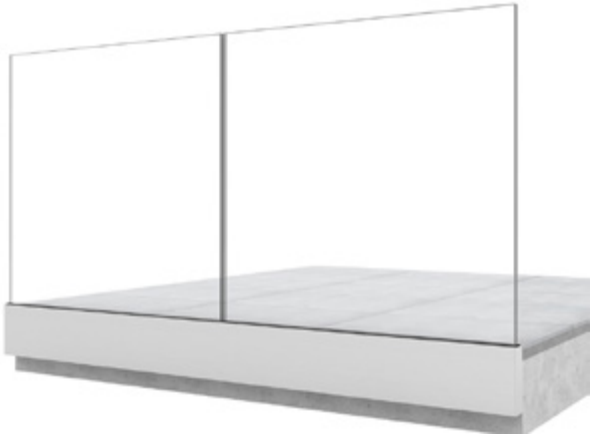

LEVEL-IN+ levelling system

Our new LEVEL-IN+ system allows the glass to be levelled and fixed from the inside of the installation, in a simple, quick and safe manner, ensuring that the railing is perfectly levelled and securely fixed.

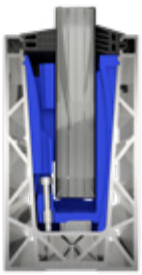

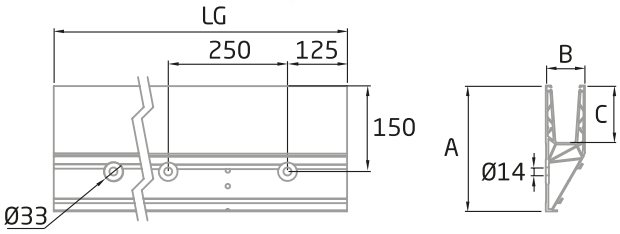

SV-1704

	LG	A	B	C
1	2500	220	68.5	100
1	5000	220	68.5	100

System components and accessories

Reference		Page
PM-01 AISI-316	Connection pin for GlassFit glass railing profiles	Page 172
PL-06	EPDM gasket for glass railing profiles	Page 172
MD-02 L	Left glass mounting bracket for sloped railing profile	Page 178
MD-02 R	Right glass mounting bracket for sloped railing profiles	Page 178
SV-1704-C OUTSIDE	90° outside corner for glass railing system	Page 183
SV-1704-C INSIDE	90° inside corner for glass railing system	Page 183
EC-1704-1	Horizontal end cap for glass railing profile with cladding CL-1704-2	Page 183
EC-1704-2	Staircase end cap for glass railing profile with cladding CL-1704-2	Page 183
DP-1704-1	Drainage profile for glass railing system	Page 184
CL-1704-2	Cladding for glass railing system	Page 184
TC-01	Aluminium profile trim for glass railing system	Page 180
PL-170 KIT	Kit with gaskets, shims and wedges for glass railing system	Page 177
PL-170 KIT-S	Special kit with gaskets, shims and wedges for glass railing system	Page 177
PL-170 PT KIT	Kit with gaskets, shims and wedges for profile trim for glass railing system	Page 177
PL-170 PT KIT-S	Special kit with gaskets, shims and wedges for glass railing system	Page 177
PL-170 LEVEL-IN+	Level-In+ Kit with gaskets, shims and wedges for glass railing system	Page 177
LED STRIP	LED/LED connectors	Page 196
Handrail options	RP-1400 - RP-1410 - SV-1255 - ST-314 - ST-315 - SV-1260	

Table of uses

Standard/Use	Glass	Height	Glazing Kit	Anchoring
CTE 0.8kN/m	L (2xTTG) PVB (e=17.52mm)	H≤ 1100 mm	PL-170 KIT (17.52)-LG25m PL-170 KIT (17.52)-LG2500 PL-170 LEVEL-IN+ KIT (17.52)	FAZ II M12 FIS VS 300 T M10
	L (2xANG) PVB (e=20.76mm)	H≤ 1100 mm	PL-170 KIT (20.38-20.76)-LG25m PL-170 KIT (20.38-20.76)-LG2500 PL-170 PT KIT (20.38-20.76)-LG2500 PL-170 LEVEL-IN+ KIT (20.38-20.76)-LG2500	
CTE 1.6kN/m	L (2xTTG) PVB (e=17.52)	H≤ 1100 mm	PL-170 KIT (21.52)-LG25M PL-170 KIT (17.52)-LG2500 PL-170 LEVEL-IN+ KIT (17.52)	FAZ II M12 FIS VS 300 T M10
	L (2xTTG) PVB (e=21.52)	H≤ 1100 mm	PL-170 KIT (21.52)-LG25M PL-170 KIT (21.52)-LG2500 PL-170 PT KIT (21.52)-LG2500 PL-170 LEVEL-IN+ KIT (21.52)-LG2500	

Private use Public use

Informative Note: The choice of glass and glazingset depends on the regulations to be met. The published information on recommended systems, anchors, and glass does not take wind action into account. For any inquiries, please contact Technical Support.

GlassFit Flow SV-1705 Fit In

Profile system

Glass railing system for recessed installations

The GlassFit SV-1705 system is a glass railing system with an aluminium profile designed for recessed installation. This configuration completely conceals the system, creating a clean, seamless and minimalist appearance in which only the glass remains visible.

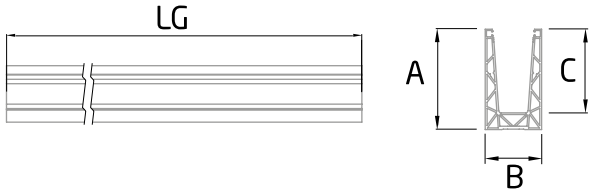

SV-1705

	LG	A	B	C
1	2500	120	68	100
1	5000	120	68	100

System components and accessories

Reference		Page
PM-01 AISI-316	Connection pin for GlassFit glass railing profiles	Page 172
LED STRIP	LED/LED connectors	Page 196
PL-170 KIT	Kit with gaskets, shims and wedges for glass railing system	Page 177
PL-170 KIT-S	Special kit with gaskets, shims and wedges for glass railing system	Page 177

Handrail options	RP-1400 - RP-1410 - SV-1255 - ST-314 - ST-315 - SV-1260

GlassFit Flow

SV-1801 Top/ SV-1801 RX Top
SV-1802 Side/ SV-1803 Top

Glass railing systems featuring aluminium profiles designed for applications with high structural requirements. Their profiles are engineered for installations in areas with high pedestrian traffic or subject to heavy loads, while providing a reliable and safe solution. The systems have been tested in accordance with the CTE requirements for private-use, public-use and crowd-load areas.

GlassFit Flow System
SV-1801 Top

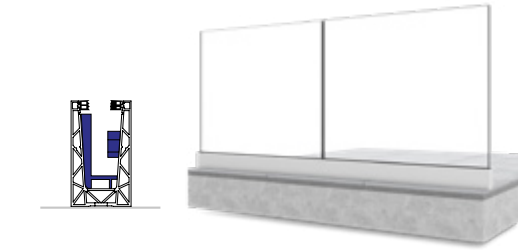

GlassFit Flow System
SV-1801 RX Top

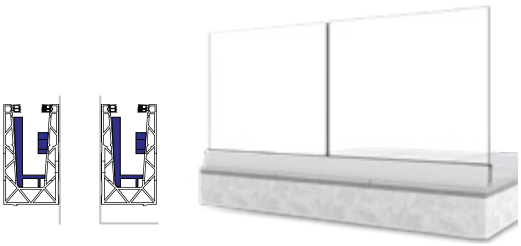

GlassFit Flow System
SV-1802 Side

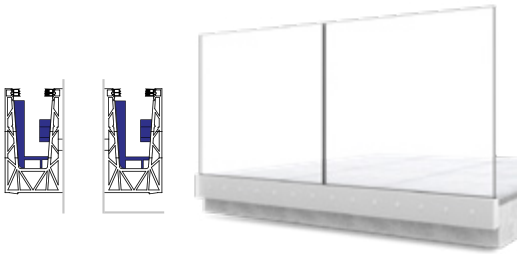

GlassFit Flow System
SV-1803 Top

GlassFit Flow SV-1801 Top

Profile System

Top-mounted glass railing system for crowd load areas

The GlassFit SV-1801 system is a glass railing system with a top-mounted anodized aluminium profile, designed for applications with high structural requirements. It is particularly suitable for high-traffic areas and locations exposed to high wind loads, such as stadiums, train stations, and rooftops. The system complies with the CTE requirements for areas classified as private and public use, as well as crowd load areas

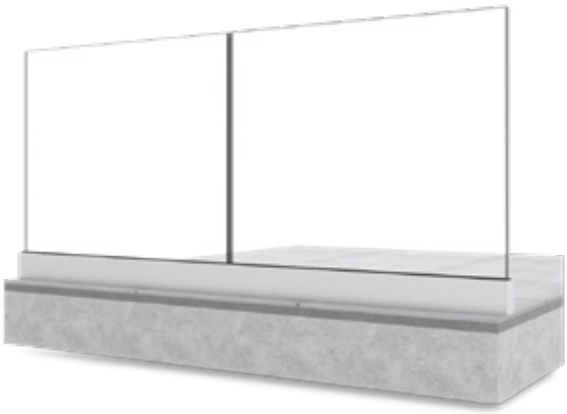

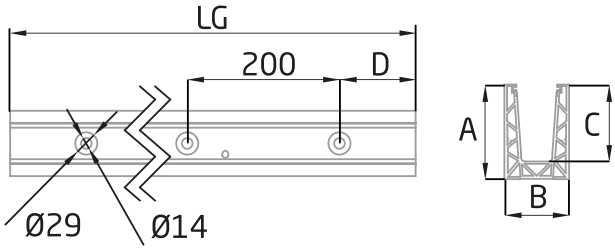

SV-1801

	LG	A	B	C	D
1	2500	123	85	100	50
1	5000	123	85	100	100

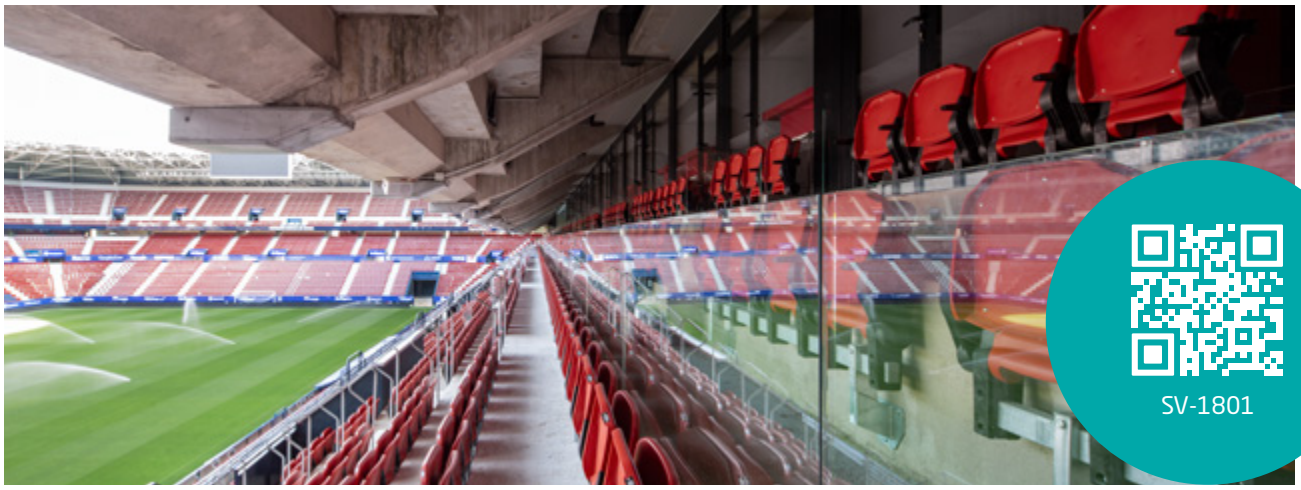

SV-1801

System components and accessories

Reference		Page
PM-01 AISI-316	Connection pin for GlassFit glass railing profiles	Page 172
PL-07	EPDM gasket for glass railing profiles	Page 184
MD-02 L	Left glass mounting bracket for sloped railing profiles	Page 178
MD-02 R	Right glass mounting bracket for sloped railing profiles	Page 178
SV-1801-C INSIDE/OUTSIDE	90° inside/outside corner for glass railing system	Page 184
EC-1801-1	Horizontal end cap for glass railing profile	Page 185
EC-1801-2	Staircase end cap for glass railing profile	Page 185
DP-02	Drainage profile for glass railing system	Page 184
LED STRIP	LED/LED connectors	Page 196
PL-180 KIT	Kit with gaskets, shims and wedges for glass railing system	Page 184

Handrail options	RP-1400 - RP-1410 - SV-1255 - ST-314 - ST-315 - SV-1260

Table of uses

Standard/Use	Glass	Height	Glazing Kit	Anchoring
CTE 1.6kN/m	L(2XTTG) PVB (e=21.52)	H≤ 1200 mm	PL-180 KIT (21.52)-LG2500	HUS4-H 10X110 HUS4-HR 10X105 FIS VS T M12
CTE 3 kN/m	L (2xTTG) PVB (e=25.52)	H≤ 1100 mm	PL-180 KIT (25.52)-LG2500	FIS VS 300 T M12
	L (2xANG) DG-41 (e=30.6)	H≤ 1100 mm	PL-180 KIT (30.38-30.76)-LG2500	

Public use Crowd load areas

Informative Note: The choice of glass and glazingset depends on the regulations to be met. The published information on recommended systems, anchors, and glass does not take wind action into account. For any inquiries, please contact Technical Support.

GlassFit Flow SV-1801 RX

Profile System

Top mount glass railing system with integrated drainage for demanding environments

The GlassFit SV-1801 RX system is a glass railing system with a top-mounted anodised aluminium profile, designed for applications with high structural requirements. Its optimised design incorporates integrated drainage channels, allowing installation in outdoor areas exposed to water or moisture. It is particularly suitable for high-traffic areas and locations subject to demanding environmental conditions. The system complies with the requirements of the Avis Technique for crowd-load areas.

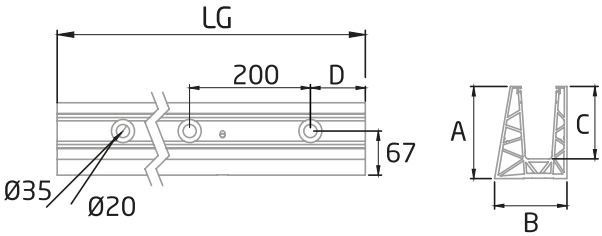

SV-1801 RX

	LG	A	B	C	D
1	5000	140	110	110	100

SV-1801 RX

System components and accessories

Reference		Page
PM-01 AISI-316	Connection pin for GlassFit glass railing profiles	Page 172
PL-07	EPDM gasket for glass railing profiles	Page 184
MD-02 L	Left glass mounting bracket for sloped railing profiles	Page 178
MD-02 R	Right glass mounting bracket for sloped railing profiles	Page 178
EC-1801 RX-1	Horizontal right end cap for glass railing profile	Page 185
EC-1801 RX-3	Horizontal left end cap for glass railing profile	Page 185
PL-180 KIT	Kit with gaskets, shims and wedges for glass railing system	Page 184

Handrail options RP-1400 - RP-1410 - SV-1255 - ST-314 - ST-315 - SV-1260

Table of uses SV-1801 RX

Standard/Use	Glass	Height	Length	Glazing Kit	Anchoring
Avis Technique 2/18-1794_V1 3 kN/m	L(2xTTG) SENTRYGLAS (e=25.52mm)	H≤ 1100 mm	L≥ 500 mm L≤ 2500 mm	PL-180 KIT (25.52)-LG2500	FIS VS 300 T M16

*Table of uses SV-1801 RX-01

Standard/Use	Glass	Height	Length	Glazing Kit	Anchoring
Avis Technique 2/18-1794_V1 3 kN/m	L(2xTTG) SENTRYGLAS (e=25.52mm)	H≤ 1100 mm	L≥ 500 mm L≤ 2500 mm	PL-180 KIT (25.52)-LG2500	HUS4-H 14X130 HUS4-HR 14X135

Crowd load areas

*SV-1801 RX-01 MTO - On Request

Informative Note: The choice of glass and glazingset depends on the regulations to be met. The published information on recommended systems, anchors, and glass does not take wind action into account. For any inquiries, please contact Technical Support.

GlassFit Flow SV-1802 Side

Profile System

Side mount glass railing system for challenging environments

The GlassFit SV-1802 system is a glass railing system with a side-mounted anodised aluminium profile, designed for applications with high structural requirements. It is particularly suitable for high-traffic areas and locations subject to heavy loads, such as stadiums, railway stations and wind-exposed sites. Its internal glass fixing system enables a more efficient installation. The system complies with the CTE requirements for areas classified as private and public use, as well as crowd load areas

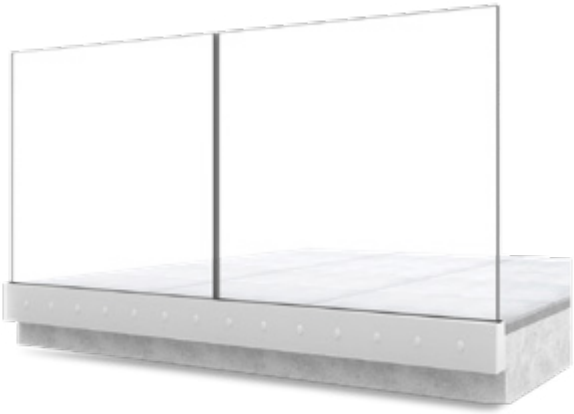

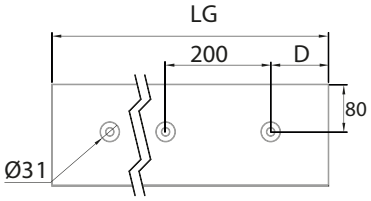

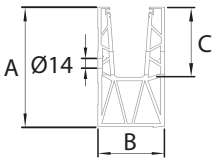

SV-1802

	LG	A	B	C	D
1	2500	170	90.5	100	50
1	5000	170	90.5	100	100

System components and accessories

Reference		Page
PM-01 AISI-316	Connection pin for GlassFit glass railing profiles	Page 172
PL-07	EPDM gasket for glass railing profiles	Page 184
MD-02 L	Left glass mounting bracket for sloped railing profiles	Page 178
MD-02 R	Right glass mounting bracket for sloped railing profiles	Page 178
SV-1802-C OUTSIDE	90° outside corner for glass railing system	Page 185
SV-1802-C INSIDE	90° inside corner for glass railing system	Page 185
EC-1802-1	Horizontal end cap with no cladding for glass railing profile	Page 186
EC-1802-2	Staircase end cap with no cladding for glass railing profile	Page 186
EC-1802-3	Horizontal end cap for glass railing profile with cladding CL-1802-1	Page 186
EC-1802-4	Staircase end cap for glass railing profile with cladding CL-1802-1	Page 186
CL-1802-1	Cladding for glass railing system	Page 186
TF-580 LDPE	Plastic cap for GlassFit glass railing profile	Page 174
PL-180 KIT	Kit with gaskets, shims and wedges for glass railing system	Page 184

Handrail options	RP-1400 - RP-1410 - SV-1255 - ST-314 - ST-315 - SV-1260

Table of uses

Standard/Use	Glass	Height	Glazing Kit	Anchoring
CTE 1.6kN/m	L(2xTTG)PVB (e:21.52)	H≤ 1100 mm	PL-180 KIT (21.52)-LG2500	FIS VS 300 T M10 HUS4-HR 10x105 HUS4-H 10x110
CTE 3 kN/m	L (2xTTG) PVB (e=25.52)	H≤ 1100 mm	PL-180 KIT (25.52)-LG2500	FIS VS 300 T M10 HUS4-HR 10x105 HUS4-H 10x110
	L (2xANG) DG-41 (e=30.76)	H≤ 1100 mm	PL-180 KIT (30.38-30.76)-LG2500	

Standard/Use	Glass	Height	Length	Glazing Kit	Anchoring
Avis Technique 3 kN/m	L(2xTTG) SENTRYGLAS (e=25.52mm)	H≤ 1100 mm	L≥ 500 mm L≤ 2500 mm	PL-180 KIT (25.52)-LG2500	FIS VS 300 T M12

Public use Crowd load areas

Informative Note: The choice of glass and glazingset depends on the regulations to be met. The published information on recommended systems, anchors, and glass does not take wind action into account. For any inquiries, please contact Technical Support.

GlassFit Flow SV-1803 Top

Profile System

Top mount glass railing system for complex architectural solutions

The GlassFit SV-1803 system is a glass railing system with a top-mounted anodised aluminium profile, designed to fulfil the technical requirements of complex projects. Its configuration allows seamless integration into a wide range of construction solutions, facilitating its adaptation to the building envelope. It is designed to withstand heavy loads, making it suitable for private-use, public-use and crowd-load areas. The system complies with the CTE requirements.

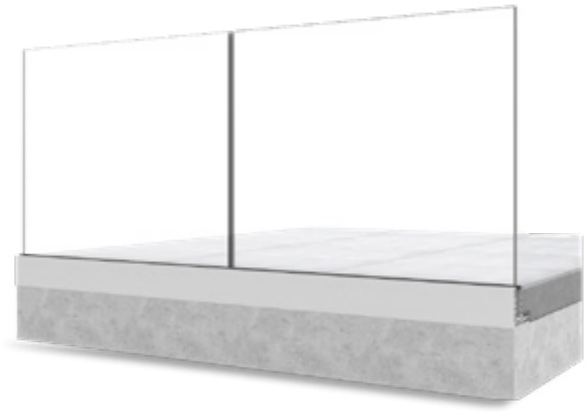

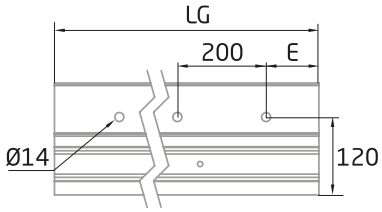

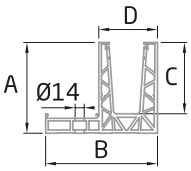

SV-1803

	LG	A	B	C	D	E
1	5000	140	172.5	110	90.5	100

System components and accessories

Reference		Page
PM-01 AISI-316	Connection pin for GlassFit glass railing profiles	Page 172
PL-07	EPDM gasket for glass railing profiles	Page 184
MD-02 L	Left glass mounting bracket for sloped railing profiles	Page 178
MD-02 R	Right glass mounting bracket for sloped railing profiles	Page 178
EC-1803-1	Horizontal right end cap for glass railing profile	Page 186
EC-1803-2	Staircase right end cap for glass railing profile	Page 187
EC-1803-3	Horizontal left end cap for glass railing profile	Page 187
EC-1803-4	Staircase left end cap for glass railing profile	Page 188
CL-1703-1	Cladding for glass railing system	Page 183
PL-180 KIT	Kit with gaskets, shims and wedges for glass railing system	Page 184

Handrail options	RP-1400 - RP-1410 - SV-1255 - ST-314 - ST-315 - SV-1260

Table of uses

Standard/Use	Glass	Height	Glazing Kit	Anchoring
CTE 1.6kN/m	L(2XTTG) PVB (e=21.52)	H≤ 1100 mm	PL-180 KIT (21.52)-LG2500	FIS VS 300 T M12 FAZ II M12X120
CTE 3 kN/m	L (2xTTG) PVB (e=25.52)	H≤ 1100 mm	PL-180 KIT (25.52)-LG2500	FIS VS 300 T M12 FAZ II M12X120
	L (2xANG) DG-41 (e=30.76)	H≤ 1100 mm	PL-180 KIT (30.38-30.76)-LG2500	

Public use Crowd load areas

Informative Note: The choice of glass and glazingset depends on the regulations to be met. The published information on recommended systems, anchors, and glass does not take wind action into account. For any inquiries, please contact Technical Support.

Handrails

Handrail systems

Handrails for Glass Railings

Handrail options

Comenza's handrail range for glass railings is designed to upgrade the system, providing both security and a flawless finish. Available in a range of shapes and configurations, the handrails adapt to different architectural styles, enhancing the appearance of each project. Their design facilitates integration with the glass, improving grip and functionality, while providing a finishing touch that enhances quality.

Our handrails for glass railings

SV-1255
U-profile handrail

SV-1260
U-profile handrail

RP-1400
Round U-shaped handrail tube

RP-1410
Rectangular U-shaped handrail tube

RP-1420
Square/rectangular stainless-steel handrail

RP-1430
Round stainless-steel handrail

Connection clamps

Comenza offers a range of connection clamps designed to facilitate the alignment of the glass panels and ensure the system's continuity. These stainless-steel clamps provide a strong and enduring solution. All clamps are available in bright polished and satin finishes. CC-736, CC-737 and CC-738 models also come in a Black Finish PVD.

CC-736

CC-737

CC-738

CC-735

Top-mounting options

Comenza offers top-mount handrail solutions suitable for different glass railing configurations. These options provide a clean and subtle integration with the glass, creating visual continuity and a refined finish. Their design facilitates installation and ensures secure fixing, improving both the overall appearance of the system and user safety.

Side-mounting options

The side-mount options allow the handrail to be attached to the glass railing using brackets fixed to the side of the glass. This solution adds versatility to the design and facilitate its adaptation to different architectural requirements. In addition, it ensures secure fixing and harmonious visual integration, enhancing the system's functionality.

Rectangular U-shaped handrail tube

RP-1410

The RP-1410 handrail is defined by its straight lines and sharp angles, providing a contemporary appearance. It enables the glass panels to be joined and aligned.

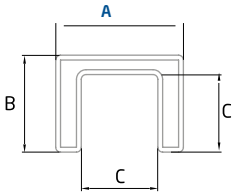

RP-1410 AISI-316 BA SATIN

LG	A	B	C	E*
5000	40	30	24	1.5

Components and accessories

Reference		*Page*
PL-03	EPDM gasket for glass railing handrails	Page 189
CT-240 AISI-316	90-degree elbow for glass handrails	Page 196
CT-241 AISI-316	Glass handrail connector	Page 196
TF-514 AISI-316	End cap for glass handrails	Page 196
FIS MS PRO	Sealant-Adhesive	Page 201
CONNECTORS	Connection clamps	Page 194

U-profile handrail

SV-1255/SV-1260

SV-1255 and SV-1260 handrails are designed to protect the edge of the glass and provide an immaculate finish to the railing. Its shape allows for a clean integration into the railing, enhancing the overall appearance of the design.

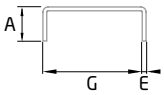

SV-1255

	LG	A	E	G
2	2500	10.5	1.5	16.38-17.52
2	2500	10.5	1.5	20.38-21.52

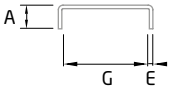

SV-1260 AISI-316

BA SATIN

	LG	A	E	G
2	2500	6	0.8	16.38-17.52
2	2500	6	0.8	20.38-21.52

Components and accessories

Reference		*Page*
RP-25	Double-sided adhesive tape, **not included**	Page 201
CONNECTORS	Connection clamps	Page 194

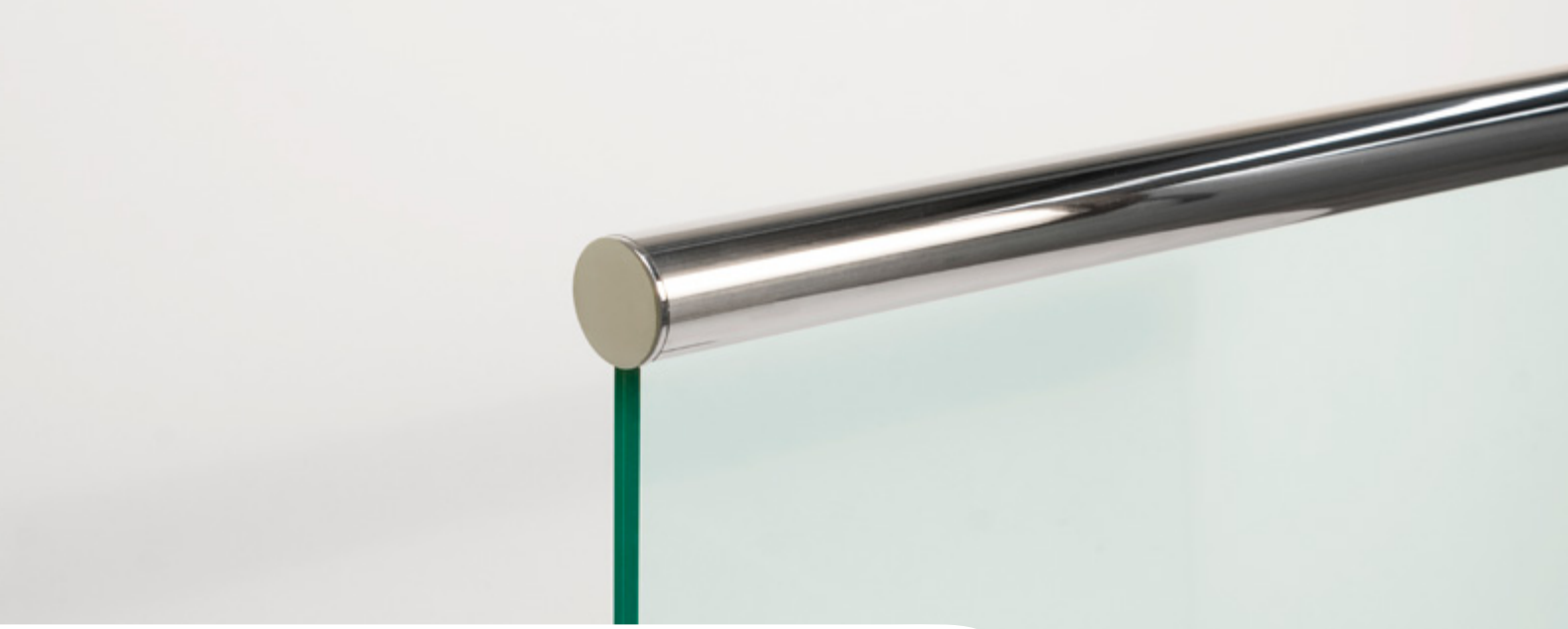

Round U-shaped handrail tube

RP-1400

The RP-1400 handrail features a tubular design that provides visual continuity and a more defined appearance to the railing. Its rounded shape improves ergonomics, offering a more natural and comfortable grip.

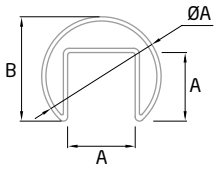

RP-1400 AISI-316 BA SATIN

LG	øA	A	B	E*
5000	42.4	24	37	1.5

Components and accessories

Reference		*Page*
PL-03	EPDM gasket for glass railing handrails	Page 189
FIS MS PRO	Sealant-Adhesive	Page 201
AV-605 AISI-316	Base for wall mounted handrail in stainless steel	Page 190
CT-211 AISI-316	Corner connector for glass handrails	Page 195
CT-212 AISI-316	Glass handrail connector	Page 195
SA-416 AISI-316	Adjustable connector for glass handrails	Page 195
SA-417 AISI-316	Adjustable connector for glass handrails	Page 195
AV-609 AISI-316	Base for wall mounted handrail in stainless steel	Page 191
TF-512 AISI-316	End cap for glass handrails	Page 191
CONNECTORS	Connection clamps	Page 194

104
103

Square stainless-steel handrail

RP-1420

It features an elongated shape that emphasizes its horizontal character, providing visual continuity. Its refined design integrates seamlessly into the project while maintaining a contemporary appearance.

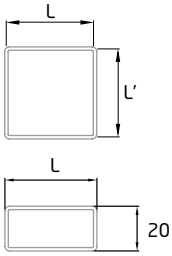

RP-1420 AISI-316 BA SATIN

LG	L	L'	E*
6000	40	40	1.5
6000	40	20	1.5

ST-315 AISI-316 BA SATIN

	A	B	C	G
2	70	32	59.5	6-25.52

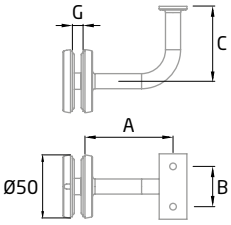

Components and accessories

Reference		*Page*
CT-220 AISI-316	90-degree elbow for square stainless-steel handrail	Page 191
CT-230 AISI-316	90-Degree elbow for rectangular stainless-steel handrail	Page 192
CT-221 AISI-316	Square stainless steel handrail connector	Page 191
CT-258 AISI-316	Rectangular stainless steel handrail connector	Page 192
SA-433 AISI-316	Adjustable connector for square stainless-steel handrail	Page 191
SA-432 AISI-316	Adjustable connector for rectangular stainless-steel handrail	Page 192
TF-530 AISI-316	End cap for square stainless-steel handrail	Page 192
TF-535 AISI-316	End cap for rectangular stainless-steel handrails	Page 192
ST-333 AISI-316	Fixed bracket for connecting a stainless-steel railing post to a square handrail	Page 192
CONNECTORS	Connection clamps	Page 194

Round stainless-steel handrail

RP-1430

The RP-1430 handrail features a tubular design that creates a seamless, well-defined effect for the entire railing. Its design makes it a versatile solution that combines functionality, durability, and a refined finish for all types of environments.

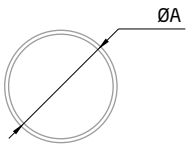

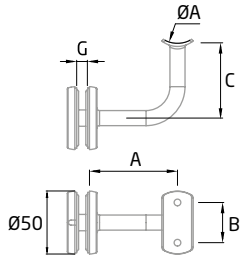

RP-1430 AISI-316 BA SATIN

LG	øA	E*
6000	43	1.5
6000	50.8	1.5

ST-314 AISI-316 BA SATIN

	øA	A	B	C	G
2	43	70	32	59.5	6-25.52
2	50.8	70	32	59.5	6-25.52

Components and accessories

Reference		*Page*
CT-200 AISI-316	90-degree elbow for round stainless steel handrail	Page 193
CT-207 AISI-316	Round stainless-steel handrail connector	Page 193
SA-409 AISI-316	Adjustable connector for round stainless steel handrail	Page 193
TF-502 AISI-316	End cap for round stainless steel handrail	Page 193
AV-601 AISI-316	Anchor for wall mounted handrail in stainless steel	Page 193
AV-606 AISI-316	Base for wall mounted handrail in stainless steel	Page 193
CONNECTORS	Connection clamps	Page 194

Wall mounted handrails

Handrail systems

Comenza's Handrail range comprises handrail systems designed to provide safety and functionality and add visual value in all types of spaces. Manufactured primarily from stainless steel, they offer versatile solutions for walls, low walls or special configurations. Their designs combine contemporary lines with refined finishes, adapting to a variety of architectural settings. The systems comply with CTE requirements and have been designed to facilitate installation, ensuring a secure grip and consistent integration into the project.

Handrail range

SEKKEI HANDRAIL
Japanese design systems

DECOLED
LED lighting systems for circulation areas.

FLEX-HEIGHT
Height-adjustable systems for low walls

STAND-RAIL
L-shaped design systems

OVAL
Oval-shaped systems for low walls

EQUAL
Systems with straight design and minimal visual impact

Range	*Systems*	*Standards*	*LED*	*Mounting*	
		SUA		Top	Side
Handrail	Sekkei	●			●
	Decoled	●	●		●
	Flex-Height	●		●	
	Stand-Rail	●			●
	Oval	●		●	
	Equal	●			●

Mounting options

TOP

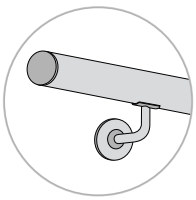

SIDE

FAST Handrails New!

Ready to install stainless-steel handrails

The FAST handrail streamlines workflow and reduces the time between material receipt, installation, and project completion. Unlike conventional handrails, FAST system references are supplied with the round tube fully machined and ready to install in 5 standard sizes.

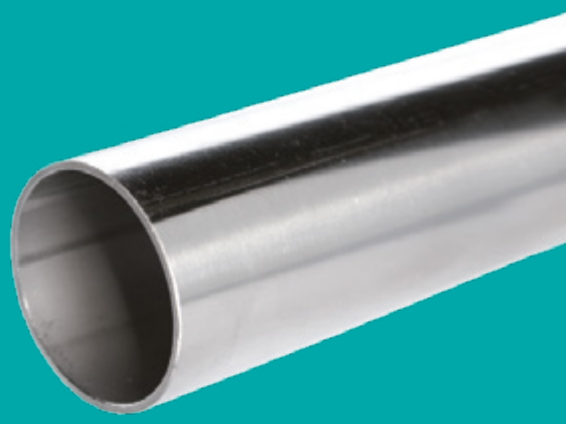

Handrail options by product range

SEKKEI HANDRAIL

ST-354

ST-356

ST-356 FLAT

ST-358

DECOLED

ST-345

ST-346

FLEX-HEIGHT

SA-490

STAND-RAIL

ST-303

ST-340

ST-353

ST-335

OVAL

ST-306

ST-304

EQUAL

ST-334

FAST Handrails

Stainless steel handrails, ready to install

Install faster, work better

Ready-to-install product

FAST handrails are delivered with tubes that have already been cut and with the brackets pre-positioned symmetrically. Components come ready to be installed, thus achieving a professional finish in just a few minutes.

Industrial quality directly on-site

The tube is cut and the support points are determined in a controlled industrial environment, ensuring consistent and precise finish with greater technical control.

Fewer errors and less waste

Industrial machining reduces potential errors in measurement, cutting, or drilling, as well as rework and unnecessary waste of stainless steel.

Greater efficiency per workday

FAST makes workflow more agile and predictable. Since there is no need to cut, measure, drill, or machine the tube on-site, efficiency is improved. This contributes to better resource management, helps prevent disruptions, and allows for more installations per day.

Simpler logistics

The various lengths are supplied in a convenient format, facilitating transport and direct delivery to the construction site or workshop via courier. *

* For the LG2400 length, transport company availability is to be checked.

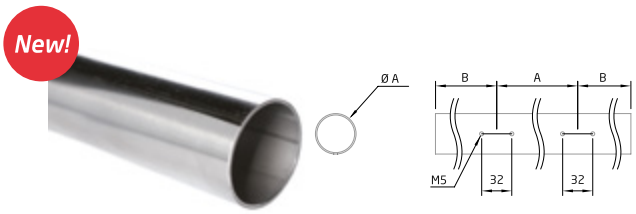

FAST Handrails: Ready to Install. Manufactured from stainless steel for professionals seeking speed, precision, and high-quality finishes. Unlike conventional handrails, FAST products are delivered with a round tube that is ready to install. It is also machined to 5 standard sizes based on the selected length. The positioning of the supports is predefined for each length, arranged symmetrically. Available for systems ST-358, ST-303, ST-340 and ST-353.

LOOK FOR THIS LABEL

COMPATIBLE FAST COMPATIBLE

RP-1430 FAST AISI-316 BA

	LG	ØA	E*	A	B
1	1000	43	1.5	600	200
1	1300	43	1.5	800	250
1	1500	43	1.5	900	300
1	1900	43	1.5	1200	350
1	2400	43	1.5	1500	450

*Tube thickness

Japanese design handrails

Despite the nearly 10,600 km separating us and the Land of the Rising Sun, at Comenza we set ourselves the goal of blending Galician and Japanese cultures to develop our most unique handrail range. This desire to find common ground with Japanese style gave rise to Sekkei Handrail, designed exclusively by the renowned Japanese designer Ryosuke Fukusada in collaboration with Comenza.

"Sekkei" means "design" in Japanese, and each handrail system in the range is characterized by its unique design and contemporary appearance. In addition, all Sekkei Handrail systems comply with the CTE safety requirements and are easy to install thanks to the hole distribution on the base and the mechanism that secures the trim.

Ryosuke Fukusada

Ryosuke Fukusada is a Japanese product designer born in Osaka in 1979 who graduated from Kanazawa College of Art and Design. He has worked for Sharp Corporation as a consumer electronics designer and for Patricia Urquiola at Studio Urquiola in Milan, where he has participated in the development of collaborative design projects with some of Italy's most prestigious designers and manufacturers. He founded Fukusada Studio in Kyoto in 2012 and began working with a large number of domestic and international clients. Fukusada currently offers a wide variety of designs for furniture, lighting, and home goods that have won prestigious international awards, such as the Chicago Athenaeum Good Design Award and the APDC*IDA Design Awards, among others.

The design process

When developing the Sekkei Handrail, Ryosuke seeks to convey the sensations evoked by the balance between softness and hardness. He therefore decided to create different design iterations using 3D modelling techniques so that, rather than focusing solely on a specific idea, he could produce a variety of realistic models. Sekkei Handrail brackets combine smoothness with strength, standing out for their minimalist and enduring appearance. The result is a modern, original but simple handrail bracket that blends into any environment.

sekkei
HANDRAIL

ST-354

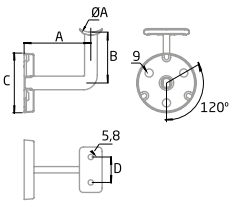

The ST-354 wall-mounted handrail system stands out for its circular base and L-shaped arm, creating a robust system with a minimalist and refined aesthetic.

ST-354 BA AISI-316 BA SATIN

	øA	A	B	C	D
2	43	73.5	56	65.6	28

Components and accessories

Reference		Page
BR-2012	Pre-assembled plugs for wall mounted handrail installation	Page 206
BR-2087	Nylon plugs	Page 206

sekkei HANDRAIL

ST-356

The ST-356 wall-mounted handrail system features the same design proposal as the ST-354, except for the base, which is replaced by a square one. This modification makes the straight lines stand out even more and gives the entire system a more geometric appearance.

ST-356 BA AISI-316 — BA | SATIN

	øA	A	B	C	D	E
2	43	72.5	56	72.8	57.8	28

ST-356 FLAT AISI-316 — BA | SATIN

	A	B	C	D	E
2	70	56	72.8	57.8	28

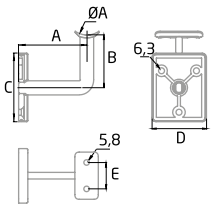

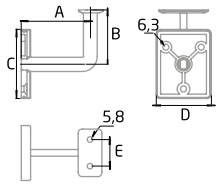

Components and accessories

Reference		Page
BR-2087	Nylon plugs	Page 206

sekkei
HANDRAIL

ST-358

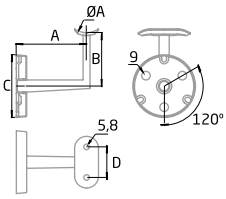

The ST-358 wall-mounted handrail system consists of a cylindrical structure that gradually narrows from the base of the wall and a prismatic structure that runs vertically. This design gives the whole piece an organic, soft appearance.

ST-358 BA AISI-316 BA SATIN

	øA	A	B	C	D
2	43	73.5	56	65.6	32

Components and accessories

Referencia		Page
BR-2012	Pre-assembled plugs for wall mounted handrail installation	Page 206
BR-2087	Nylon plugs	Page 206

DecoLed

LED-integrated handrail systems

Our Decoled handrail system range provides uniform illumination along walkway thanks to the LED strip integrated into its slotted tube. These handrail systems have been designed to create a warm and welcoming atmosphere wherever they are installed.

Decoled handrails are compatible with LED strips of various intensities and light colors, all of which are energy-efficient. Additionally, thanks to the brackets being manufactured from stainless steel (AISI 316), they are suitable for indoor or outdoor environments. Available in both round and square tube shapes.

Handrail range

DecoLed RP-1400

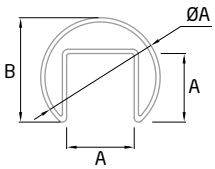

DecoLed RP-1410

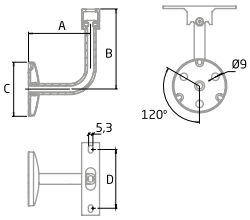

DecoLed

RP-1400

Cylindrical handrail with integrated LED lighting that provides continuous, uniform illumination along walkways. It improves visibility and provides a modern, functional finish.

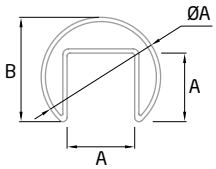

RP-1400 AISI-316 BA SATIN

LG	øA	A	B	E*
5000	42.4	24	37	1.5

Components and accessories

Reference		*Page*
ST-345 AISI-316	Fixed bracket for Deco Led stainless steel handrail system	Page 194
ST-346 AISI-316	Fixed bracket for Deco Led stainless steel handrail system	Page 194
TF-512 AISI-316	End cap for glass handrails	Page 191
AL-01	Aluminium profile and polycarbonate lens for the Deco Led handrail system	Page 195
AL-00 AISI-304	Deco Led handrail clamp	Page 195
CT-211 AISI-316	Corner connector for glass handrails	Page 195
CT-212 AISI-316	Glass handrail connector	Page 195
SA-416 AISI-316	Adjustable connector for glass handrails	Page 195
SA-417 AISI-316	Adjustable connector for glass handrails	Page 195
LED	LED/LED connectors	Page 197
BR-2012	Pre-assembled plugs for wall mounted handrail installation	Page 206

DecoLed

RP-1410

Handrail with straight lines and integrated LED lighting that provides continuous, even light. It creates a contemporary atmosphere and improves visibility in walkways.

RP-1410 AISI-316 BA SATIN

LG	øA	A	B	E*
5000	40	30	24	1.5

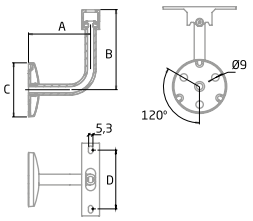

ST-346 AISI-316 BA SATIN

	A	B	C	D
2	75	97	66	72

Components and accessories

Reference		*Page*
TF-514 AISI-316	End cap for glass handrails	Page 196
AL-01	Aluminium profile and polycarbonate lens for the Deco Led handrail system	Page 195
AL-00 AISI-304	Deco Led handrail clamp	Page 195
CT-240 AISI-316	90-degree elbow for glass handrails	Page 196
CT-241 AISI-316	Glass handrail connector	Page 196
LED KIT	LED/LED connectors	Page 197
BR-2012	Pre-assembled plugs for wall mounted handrail installation	Page 206

Flex Height

Height-adjustable handrail systems

The main feature of our Flex-Height handrail system range for low walls is its height-adjustment mechanism, which allows the handrails to adapt to uneven surface and compensate for any differences in level. Flex-Height systems also allow for multiple mounting combinations with other handrail brackets for different types of tubes (round, square, etc.).

The Flex-Height range is all about versatility, adaptability, and design: its modern, minimalist style gives a contemporary and polished appearance to any space. In addition, since they are made of stainless steel (AISI 316), they provide excellent strength and stability in both outdoor and indoor applications.

Flex Height

SA-490

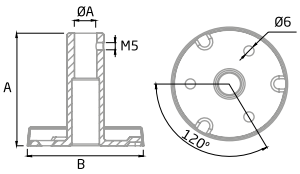

Handrail bracket for low walls with a compact and discreet design. It guarantees secure fixing, providing stability and continuity to the entire structure.

SA-490 BA AISI-316 BA SATIN

	øA	A	B
2	12.5	65	66

Components and accessories

Reference		*Page*
BG-00 AISI-316	Bracket for stainless steel handrail	Page 198
BF-00 AISI-316	Bracket for stainless steel handrail	Page 198
BG-R AISI-316	Bracket for round stainless steel handrail	Page 199
BF-R AISI-316	Bracket for round stainless steel handrail	Page 199
BG-FLAT AISI-316	Bracket for square or rectangular stainless-steel handrail	Page 199
BF-FLAT AISI-316	Bracket for square or rectangular stainless-steel handrail	Page 199
BF-C FLAT 90 AISI-316	Bracket for corner square or rectangular stainless-steel handrail	Page 199
BF-C R 90 AISI-316	Bracket for corner stainless steel handrail	Page 199
BR-2087	Nylon plugs	Page 206

Stand-Rail

L-shaped handrail systems with a circular base

Our Stand-Rail range of wall-mounted handrail systems comprises a variety of L-shaped brackets that, combined with the different options for square, rectangular, or round tubes, add elegance and simplicity to every space where they are installed.

In addition, all of our brackets are manufactured from stainless steel (AISI 316), which allows them to be installed both indoors and outdoors, offering high strength and safety in either setting.

Stand-Rail

ST-353 /ST-303

Curved handrail brackets that create a seamless and elegant appearance.

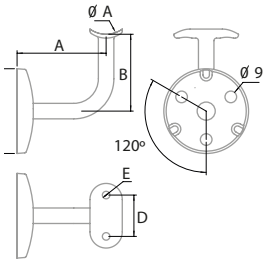

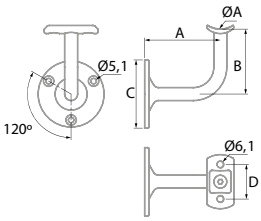

ST-353 AISI-316 — BA | SATIN

	øA	A	B	C	D	E
2	43	70	60	66	32	6.1
2	50.8	70	60	66	32	6.1

ST-303 AISI-316 — BA | SATIN

	øA	A	B	C	D
2	43	70	60	63	32
2	50.8	70	60	63	32

Components and accessories

Reference		*Page*
ST-353 W AISI-316	Fixed bracket for round stainless steel wall-mounted handrail	Page 200
ST-303 W AISI-316	Fixed bracket for stainless steel wall-mounted handrail	Page 199
ST-303 A AISI-316	Adjustable bracket for round stainless steel wall-mounted handrail	Page 199
ST-303 FLAT AISI-316	Fixed bracket for stainless steel wall-mounted handrail (square or rectangular)	Page 200
BR-2012	Pre-assembled plugs for wall mounted handrail installation	Page 206
BR-2087	Nylon plugs	Page 206

Stand-Rail

ST-340

Handrail bracket with compact design and gentle lines that facilitates its installation on the wall using chemical anchors.

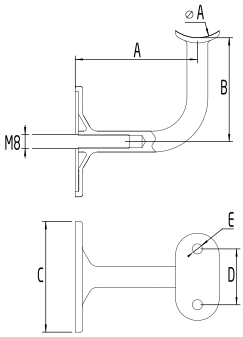

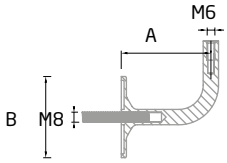

ST-340 AISI-316 — BA | SATIN

	øA	A	B	C	D	E
2	43	70	59.5	63	32	5.8
2	50.8	70	59.5	63	32	4.5

ST-340 W AISI-316 — BA | SATIN

	A	B
2	70	63

Components and accessories

Reference		*Page*
BR-2016	Plastic mesh sleeve for chemical anchors	Page 202

Stand-Rail

ST-335 FLAT

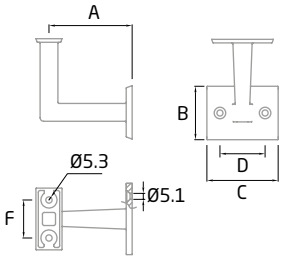

Handrail bracket with a straight, minimalist design that enhances the contemporary aesthetic.

ST-335 FLAT AISI-316 BA SATIN

	A	B	C	D	F
2	70	45	60	38	32

Components and accessories

Reference		*Page*
BR-2087	Nylon plugs	Page 206

Oval

Handrail systems with an oval base for low walls

When creating the Oval range of handrail systems for low walls, we sought to convey the harmony of curved lines by developing brackets whose circular design takes centre stage.

The Oval range brackets are compatible with tubes of different diameters and incorporate end caps that give the handrail an elegant and refined appearance. All of them are made of stainless steel (AISI 316), making them suitable for both indoors and outdoors applications.

Oval

ST-306 / ST-304

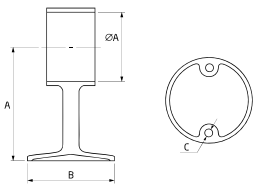

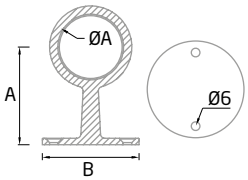

Handrail brackets with a spherical design that add a distinctive and elegant appearance.

ST-306 AISI-316 BA SATIN

	øA	A	B	C
2	43	72	69	5.1
2	50.8	84	63	5.8

ST-304 AISI-316 BA SATIN

	øA	A	B
2	43	68	67

Components and accessories

Reference		*Page*
ST-306 END AISI-316	Fixed blind wall-mounted bracket for round stainless steel handrails	Page 200
ST-304 END AISI-316	Fixed blind wall-mounted bracket for round stainless steel handrails	Page 200
ST-313 AISI-316	Fixed bracket for round stainless steel wall-mounted handrail	Page 200

Equal

Handrail systems with a straight aesthetic and minimal visual impact.

Our Equal range of wall-mounted handrail systems stands out for its square shape and compact dimensions, defined by clean, straight lines. This geometric feature adds a distinctive touch within styles that are typically more common.

Equal strikes a balance between practicality and functionality, combined with an innovative aesthetic and minimal visual impact. It delivers both elegance and strength. In addition, as it is manufactured from stainless steel (AISI 316), it is perfect for both indoor and outdoor applications.

Equal

ST-334 FLAT

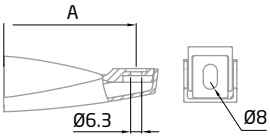

Handrail bracket with an angular, compact design that offers a modern and discreet aesthetic.

ST-334 FLAT AISI-316 BA SATIN

	A	E*
2	75	1.5

Components and accessories

Reference		*Page*
BR-2012	Pre-assembled plugs for wall mounted handrail installation	Page 206
DIN-7984 M-6 L-20	DIN Screw	Page 202
BR-2011 M-6	Blind rivet nut grooved reduced head	Page 202
BR-2087	Nylon plugs	Page 206

Minimal Post

Installation instructions

Installation guide for modular post systems of the Minimal Post range. Step-by-step guide to ensure precise and fully functional results.

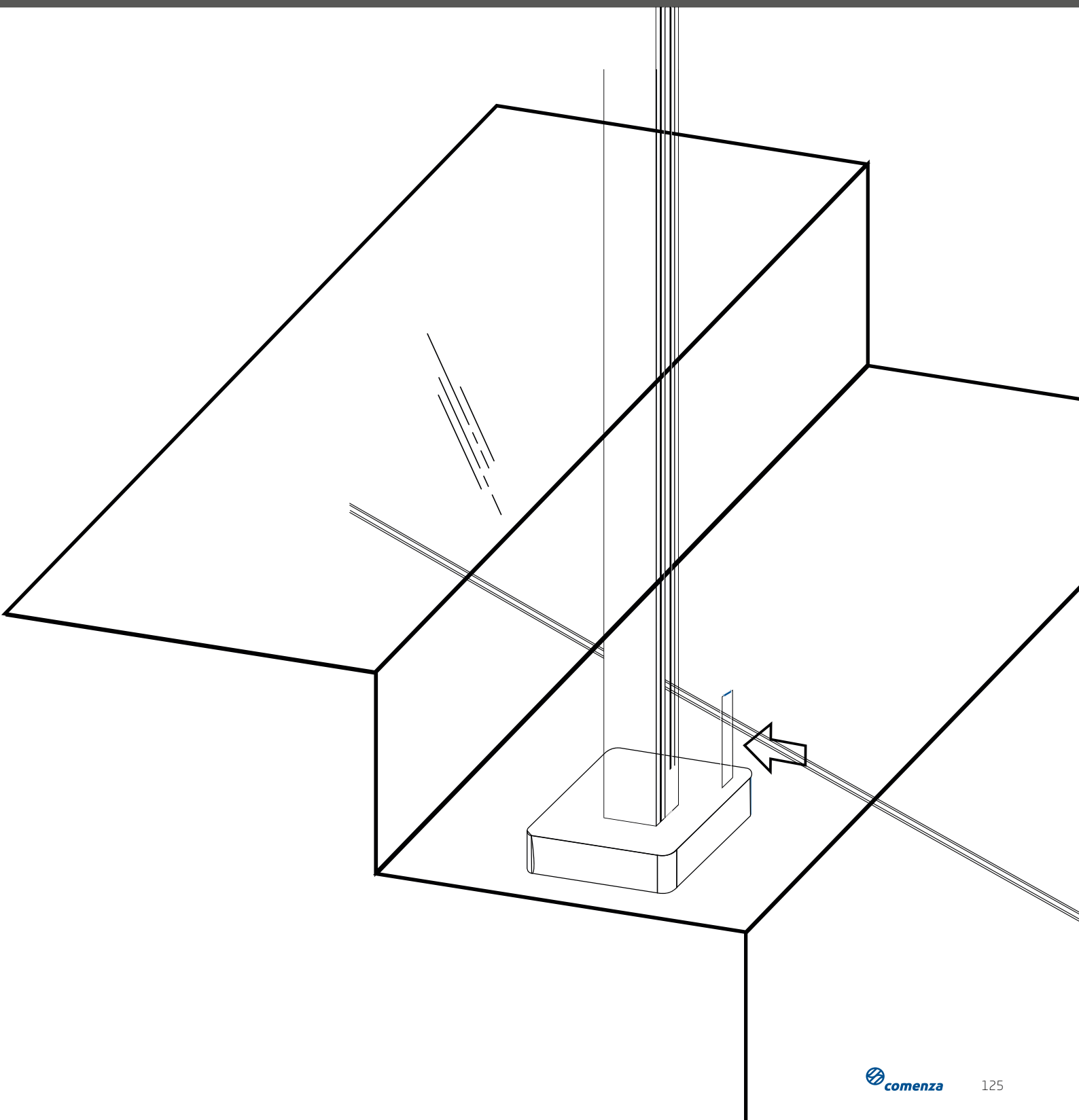

Installation instructions
MT-200

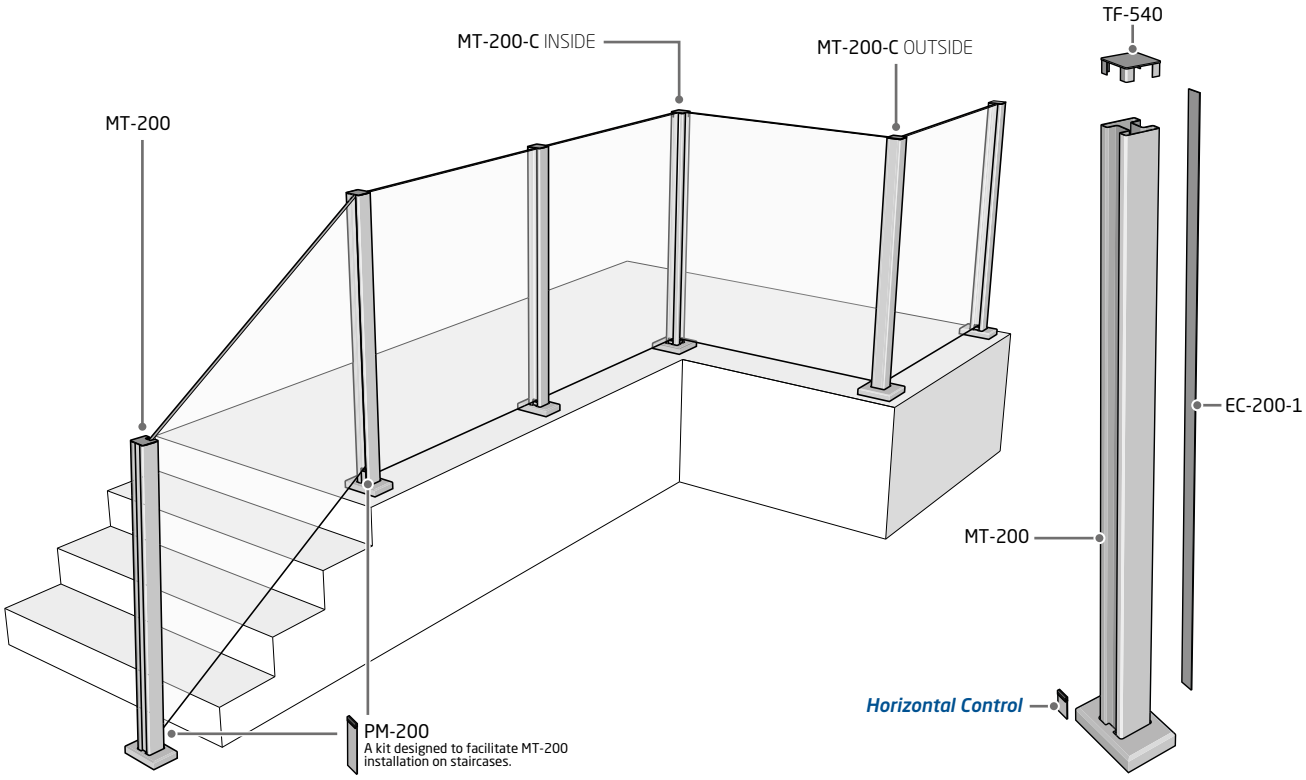

1 Fix the post to the ground without tightening the anchors. Use the SLOT 180° device to correct the position of the post.

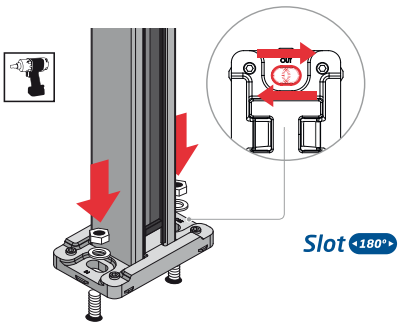

2 Level the post using the LEVEL 3D device. Once levelled, tighten the anchors.

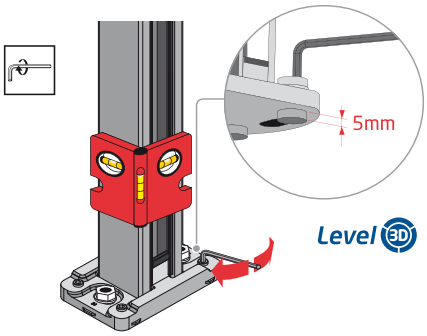

3 Install the trims.

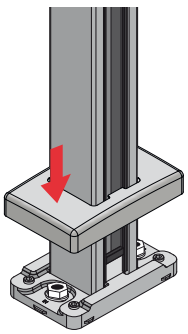

4 Adjust the vertical position of the glass using HORIZONTAL CONTROL. Adjustment is obtained by trimming the piece.

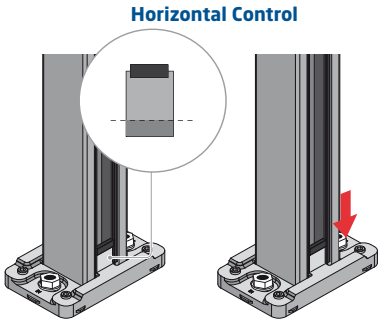

5 Mount the glass.

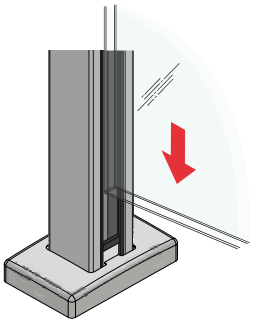

6 Fix the glass using a glazing kit.

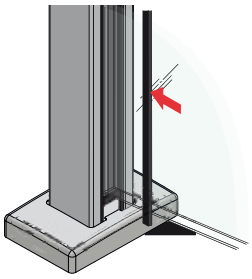

7 Install and fix the cap with glue.

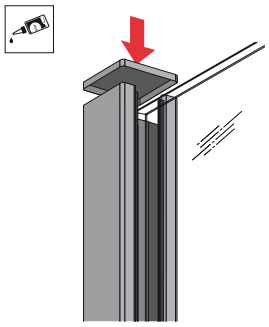

Installation instructions
MT-201

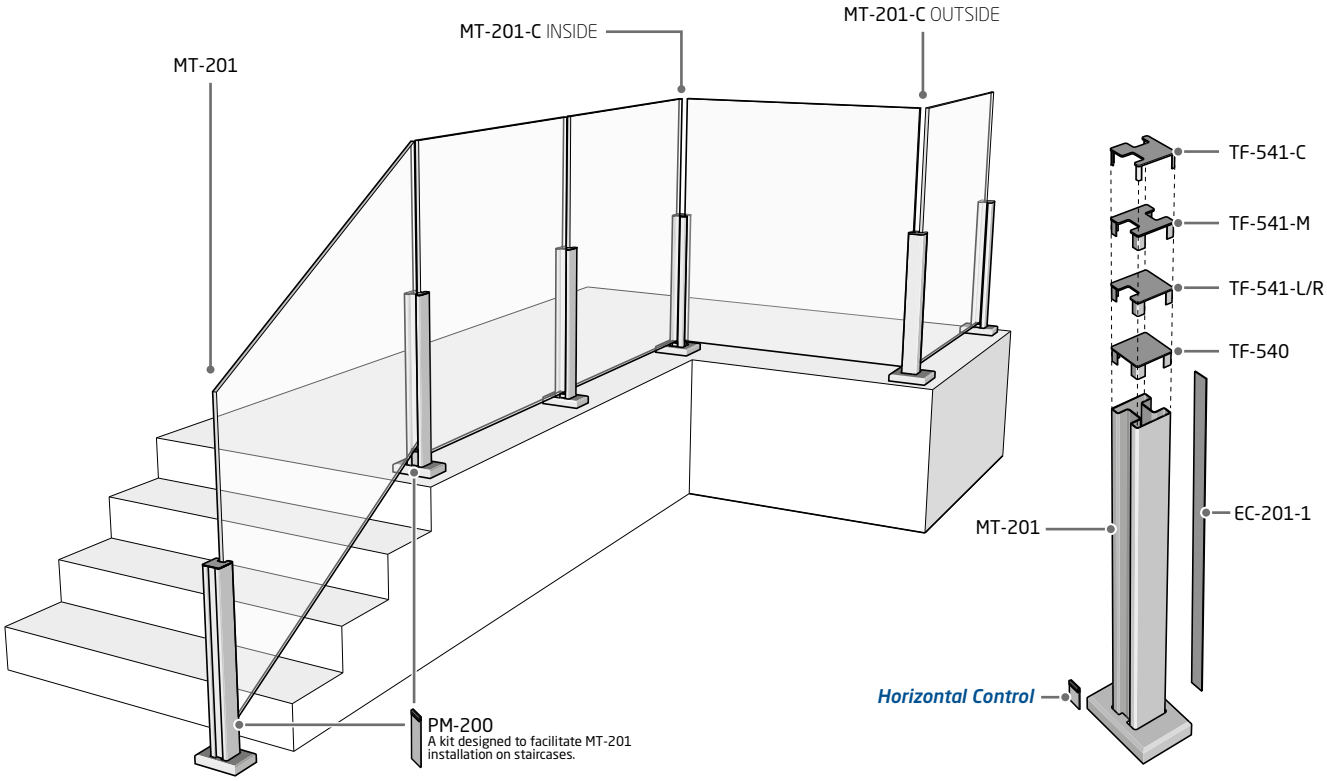

1 Fix the post to the ground without tightening the anchors. Use the SLOT 180° device to correct the position of the post.

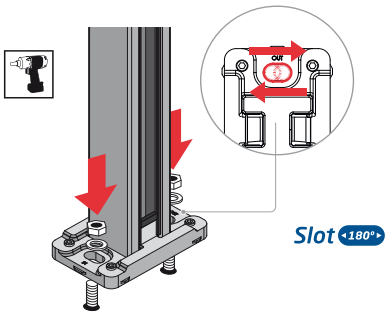

2 Level the post using the LEVEL 3D device. Once levelled, tighten the anchors.

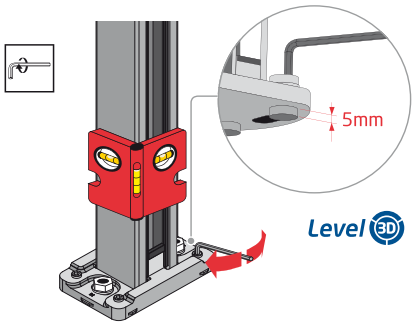

3 Install the trims.

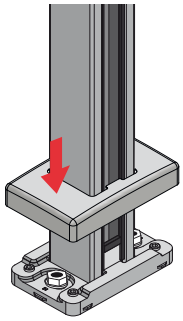

4 Adjust the vertical position of the glass using HORIZONTAL CONTROL. Adjustment is obtained by trimming the piece.

Horizontal Control

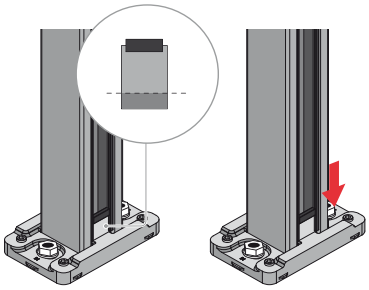

5 Mount the glass.

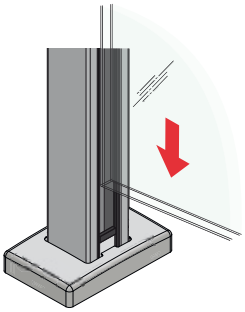

6 Fix the glass using a glazing kit.

PL-201

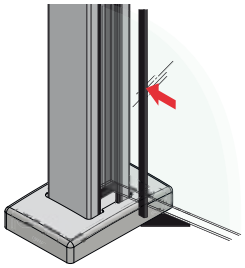

7 Install and fix the cap with glue.

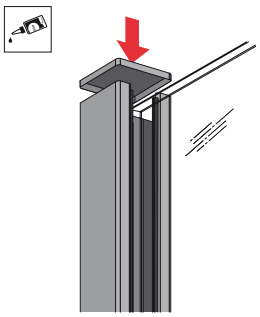

GlassFit Surface/Gravity

Installation instructions

Installation methods for glass railing systems featuring clamps and side adapters from the GlassFit Surface and GlassFit Gravity ranges, respectively.

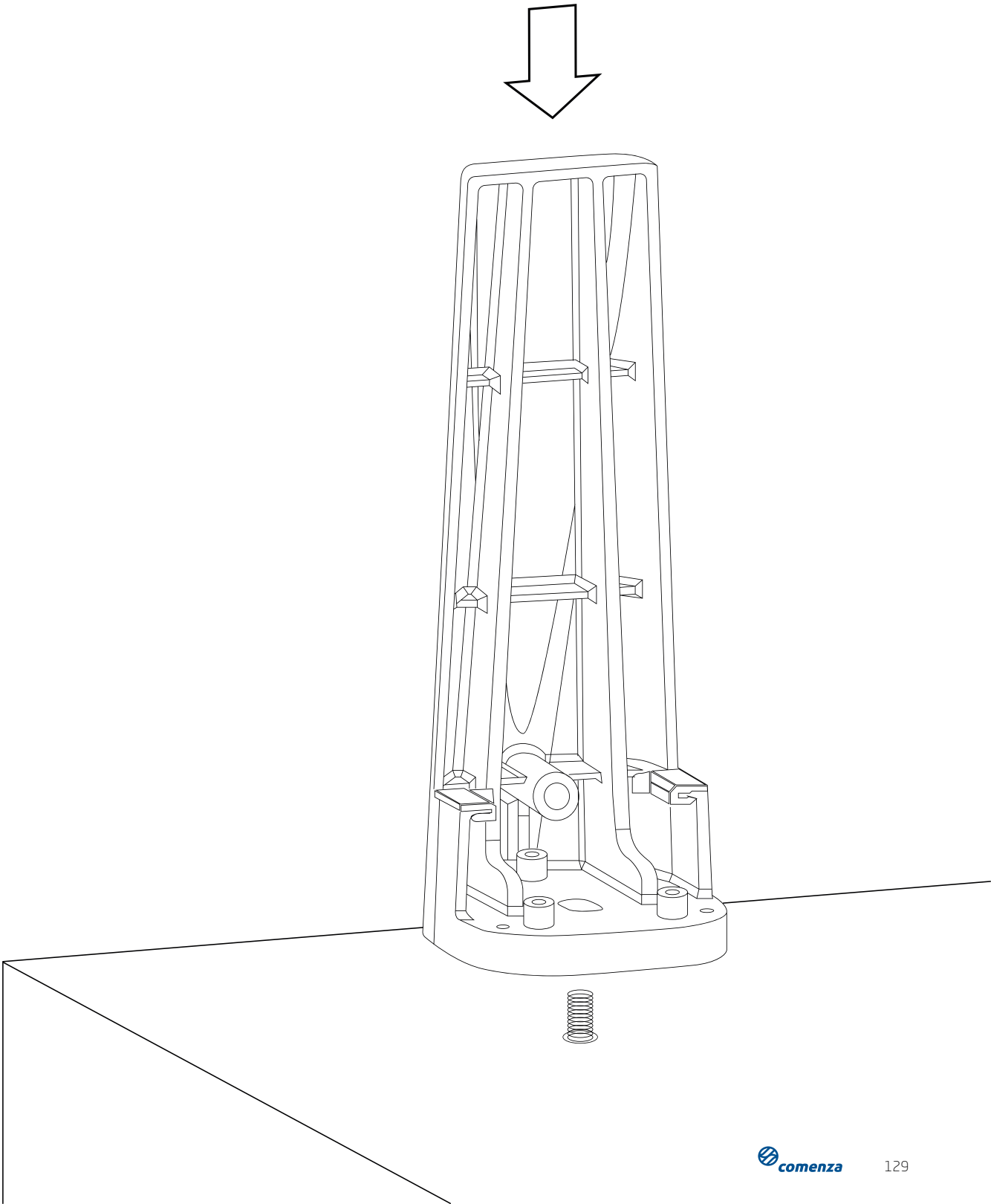

Installation options

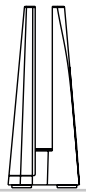

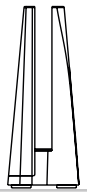

Upper clamp

CC-800 / CC-801

	Slot 180	Level 3D	DUPLEX 220 5
CC-800	●	●	●
CC-801	●	●	

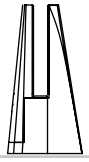

Upper clamp

CC-780

	Slot 180	Level 3D
CC-780	●	●

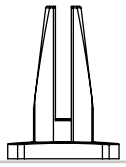

Upper clamp

CC-782

	Slot 180	Level 3D
CC-782	●	●

Installation options

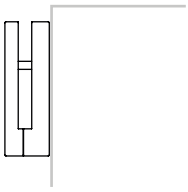

Side clamp

CC-791

	Slot 360 °	Level 2 D
CC-791	●	●

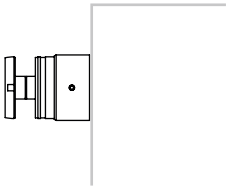

Side button

CC-775

	Slot 360 °	Level 2 D
CC-775	●	●

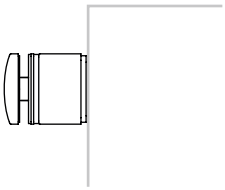

Side button

CC-772

	Slot 360 °	Level 2 D
CC-772	●	●

Installation instructions
GlassFit Surface **CC-800/CC-801**

1 Install the clamp base and adjust it with SLOT 180.

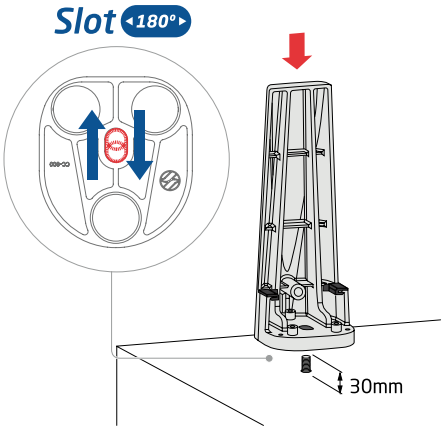

2 Level the clamp using the LEVEL 3D device.

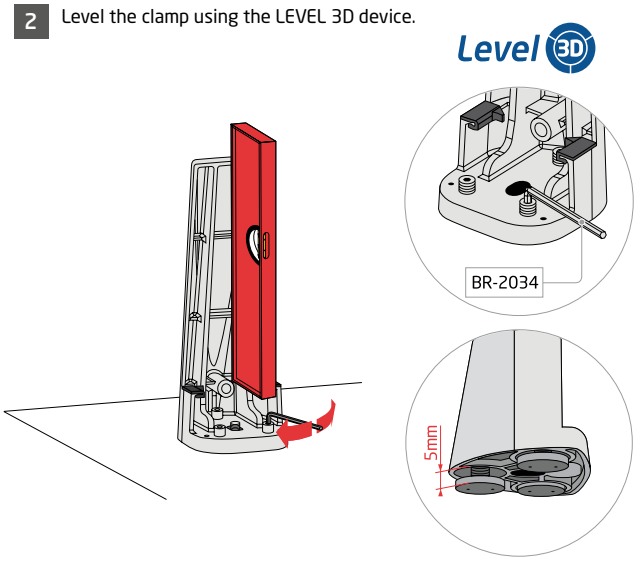

3 Install the outer rubber of the glazing kit.

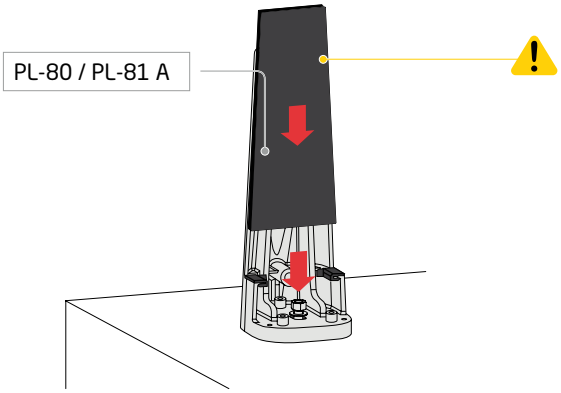

4 Mount the glass.

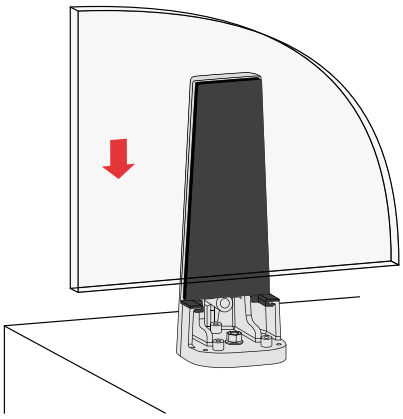

5 Install the outer rubber and part 2 of the clamp.

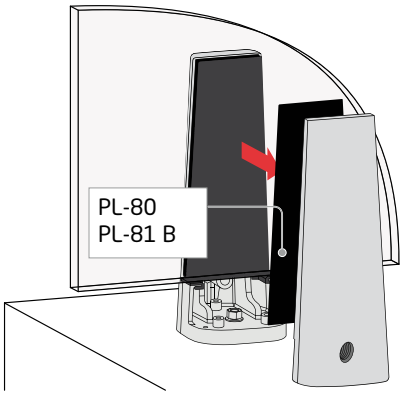

6 Tighten the screw to secure the glass and fit the decorative cap to conceal the screw.

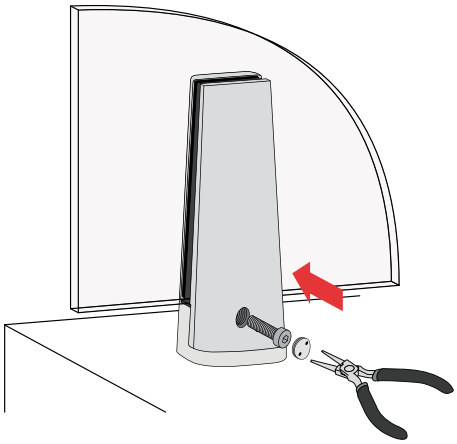

Installation instructions
GlassFit Surface **CC-780**

1 Install the clamp base and adjust it with SLOT 180.

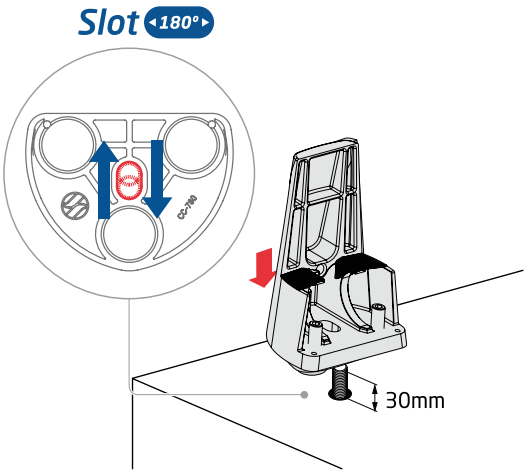

2 Level the clamp using the LEVEL 3D device.

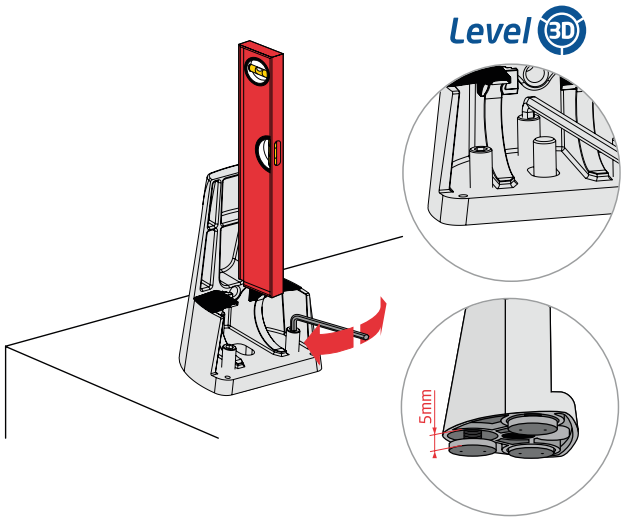

3 Tighten the anchor.

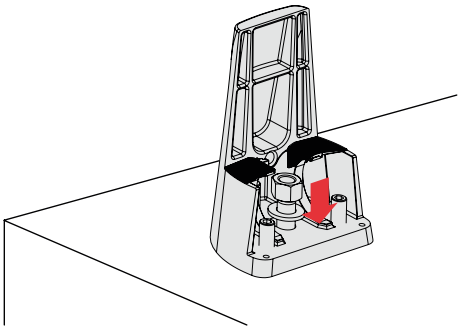

4 Install the outer rubber of the glazing kit.

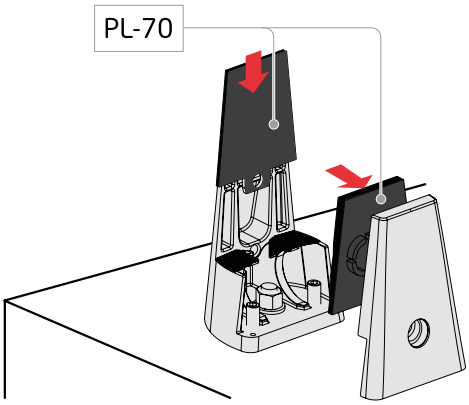

5 Once the glass has been fitted, tighten the screw to secure it, and place the decorative cap.

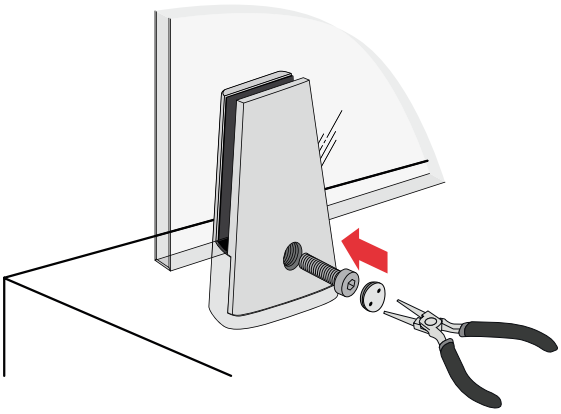

Installation instructions GlassFit Surface **CC-782**

1 Install the clamp base and adjust with SLOT 180.

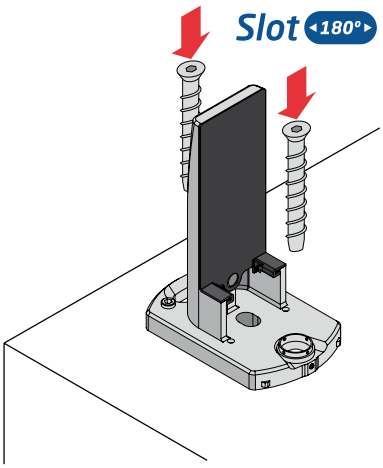

2 Level the clamp using the LEVEL 3D device.

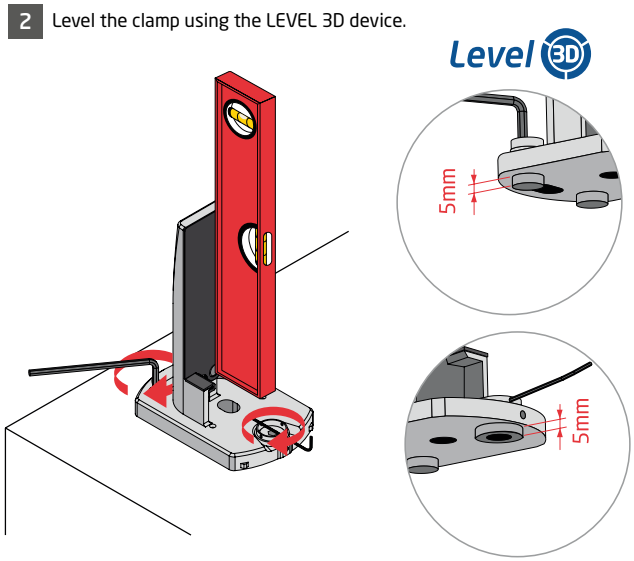

3 Tighten the anchor.

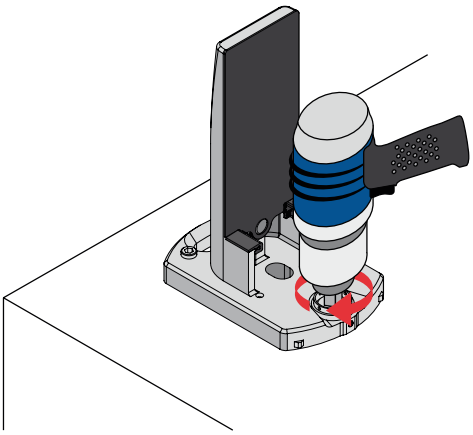

4 Place the base trim.

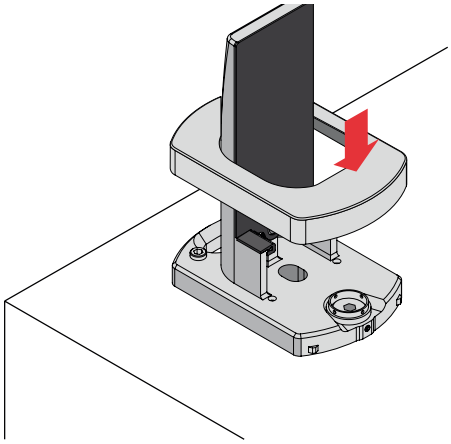

5 Once the glass has been fitted, tighten the screw to secure it, and place the decorative cap.

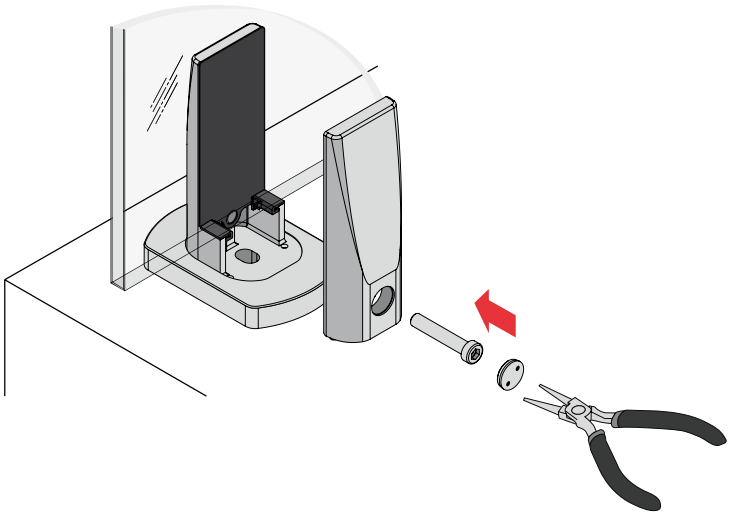

Installation instructions
GlassFit Surface **CC-791**

1 Install the clamp base with the trim cap and adjust its position using SLOT 360.

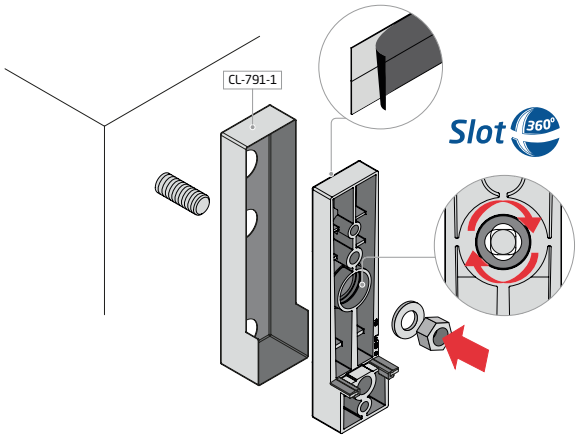

2 Level the clamp using the LEVEL 2D device.

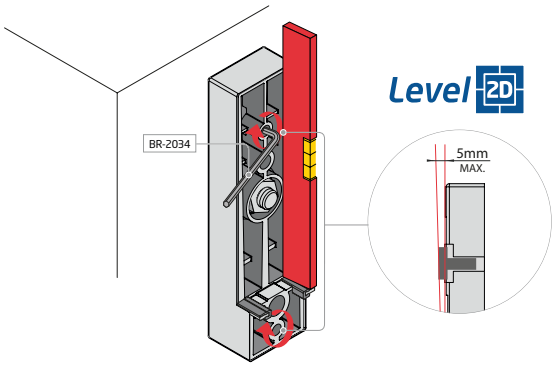

3 Install the inner rubber seal and the glass.

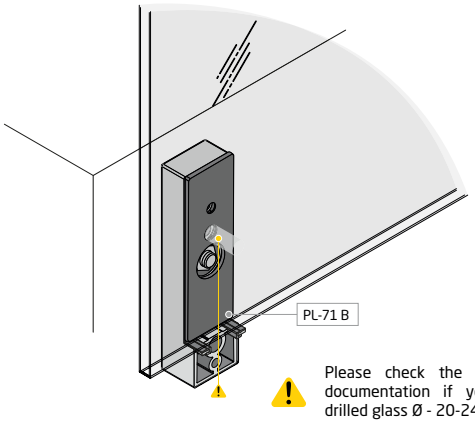

Please check the technical documentation if you need drilled glass Ø - 20-24 mm

4 Install the cap using the exterior glazing kit.

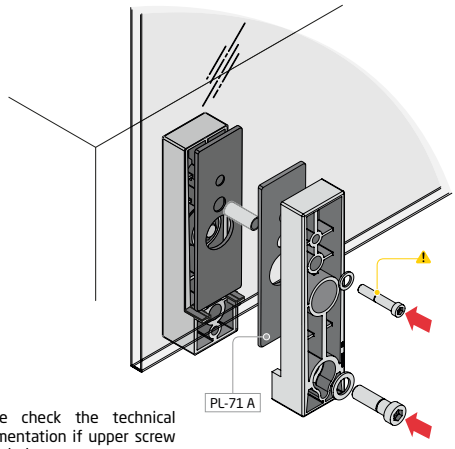

Please check the technical documentation if upper screw is needed

5 Place the outer trim.

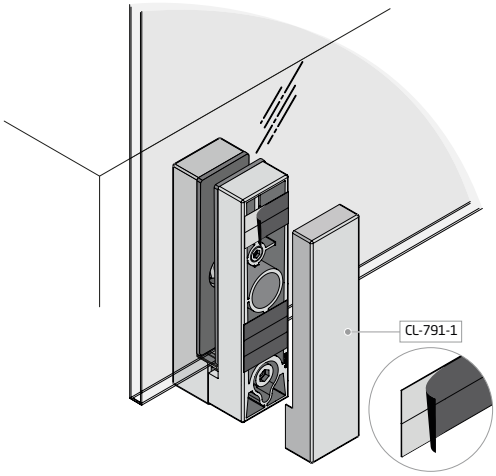

Installation instructions GlassFit Surface **CC-772**

1 Install the base.
Adjust its position and alignment with the other bases using the SLOT 360 device.

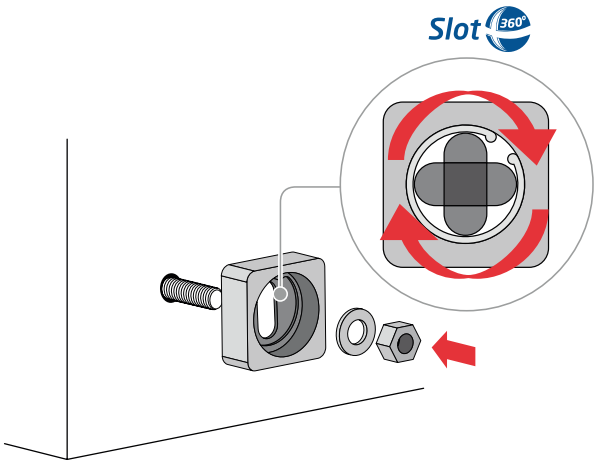

2 Thread the part.
Align the parts with each other using the LEVEL 2D device.

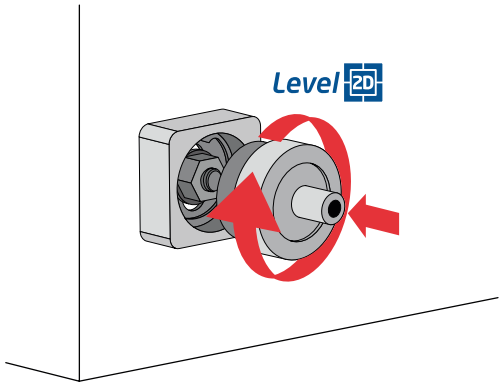

3 Place the trim and the inner rubbers.

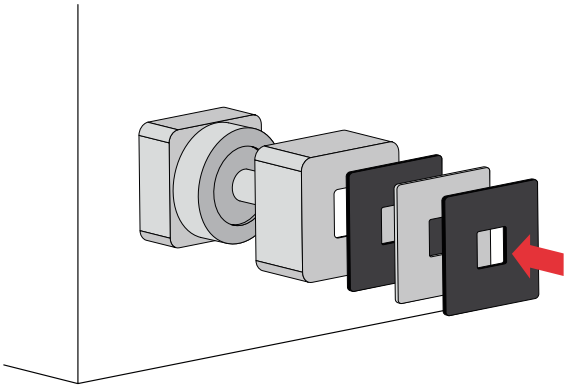

4 Place the glass and, if necessary, level it using the LEVEL 2D device and an Allen wrench.

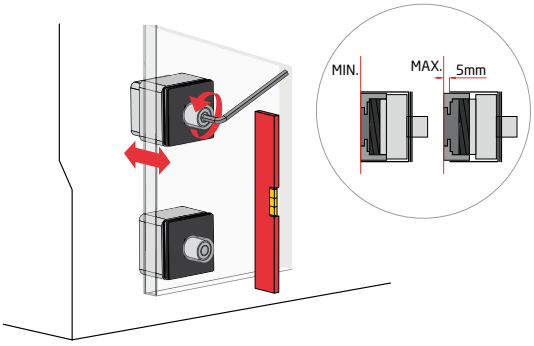

5 Install the outer rubber seal and the fastening piece to secure the glass.

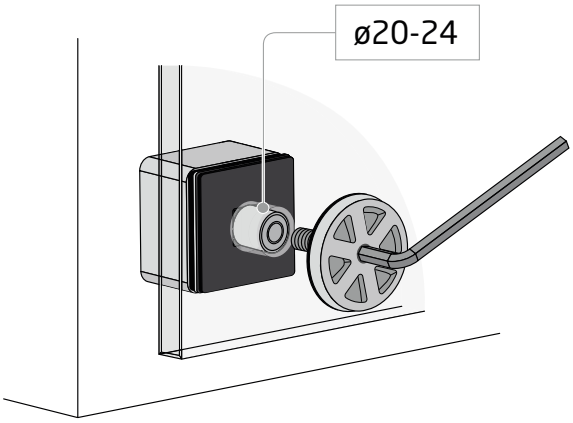

6 Tighten the cover with the set screw.

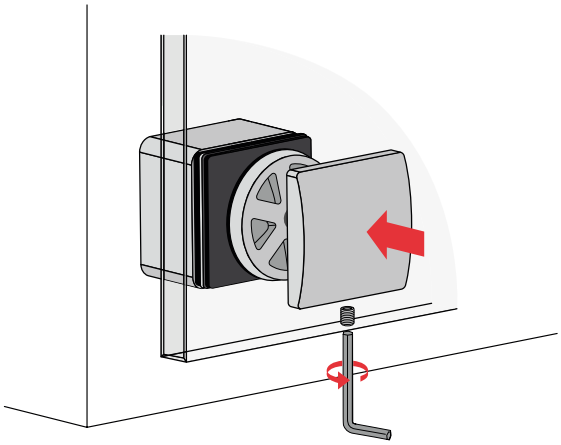

Installation instructions
GlassFit Surface **CC-775**

1 Install the base
Adjust its position and alignment with the other bases using the SLOT 360 device.

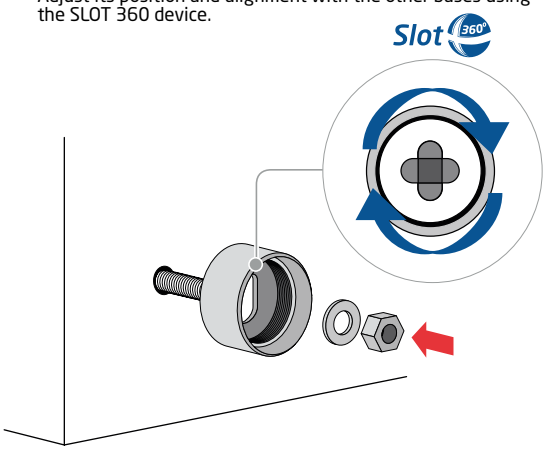

2 Thread the part. Align the parts with each other using the LEVEL 2D device.

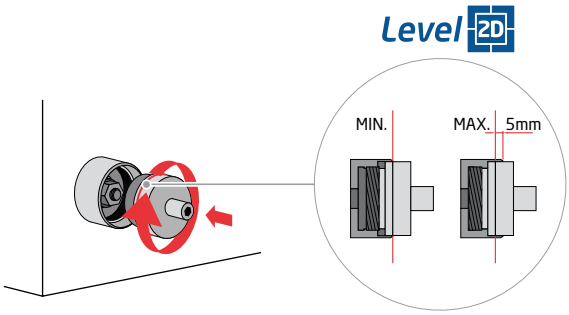

3 Place the inner rubber.

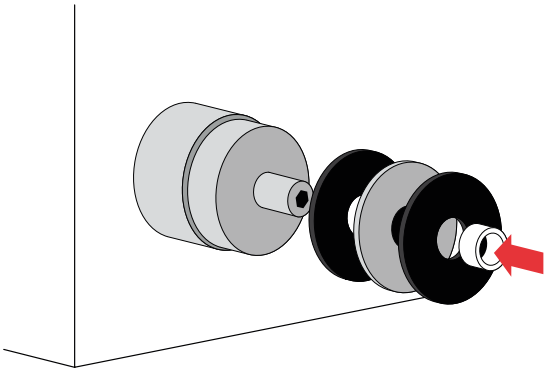

4 Place the glass and, if necessary, level it using the LEVEL 2D device and an Allen wrench.

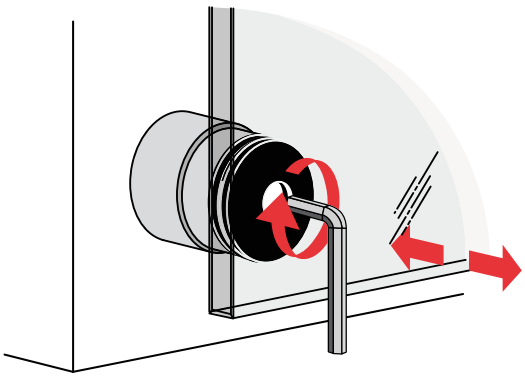

5 Place the outer parts and fix the glass with the cap.

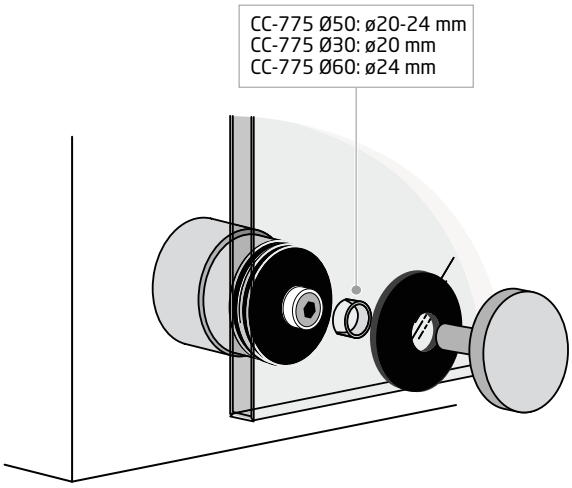

GlassFit Frame

Installation instructions

Mounting instructions for the FB-10 French balcony system, with guidelines for proper installation face-mounted, on the window frame, or between jambs.

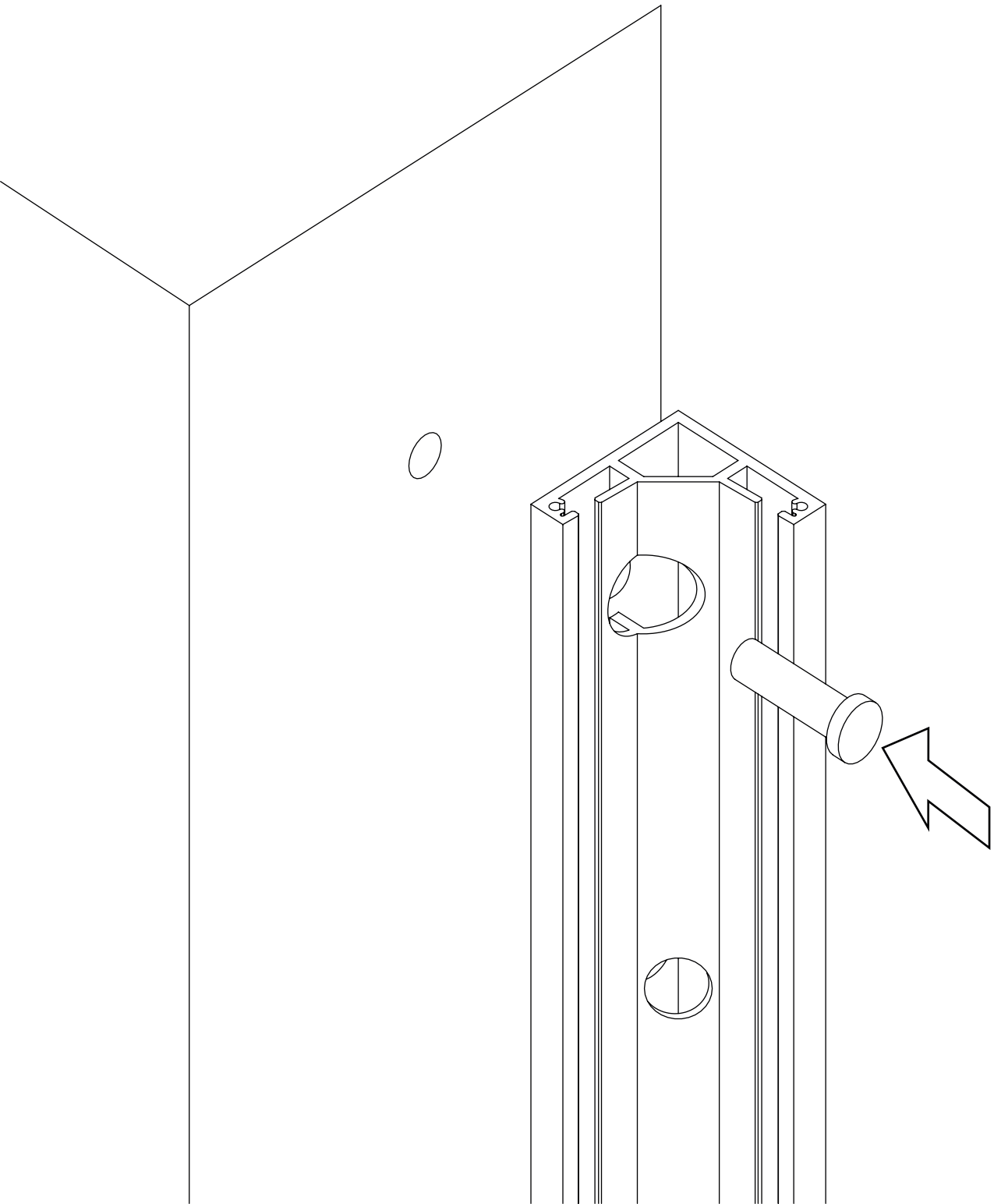

Installation options
FB-10 On the facade

Front mounting: from the outside

1 Fix lower cap.

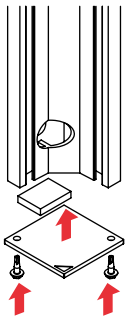

2 Anchor part 1.

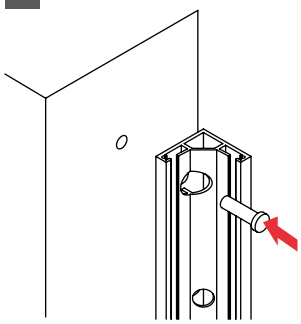

3 Place LED strip (LED STRIP*).

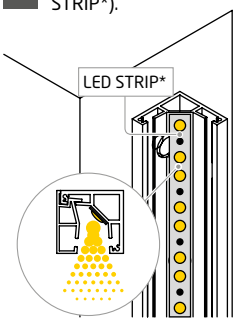

4 Fit inner rubber.

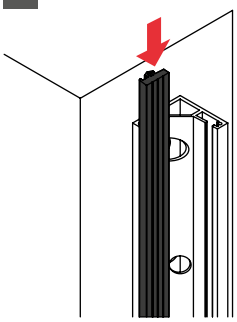

5 Mount the glass.

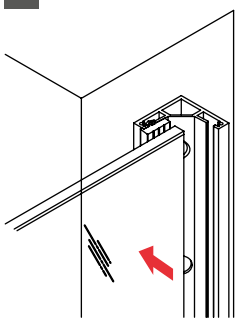

6 Fit part 2.

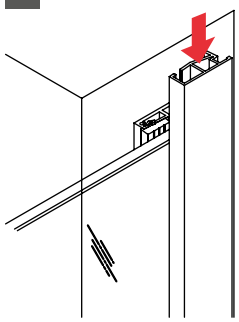

7 Fix glass with outer rubber.

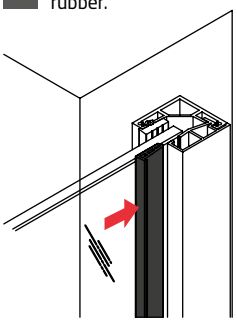

8 Place upper cap.

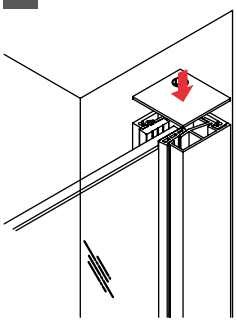

Front mounting: from the inside

1 Fix lower cap.

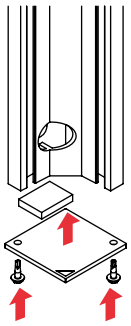

2 Anchor part 1.

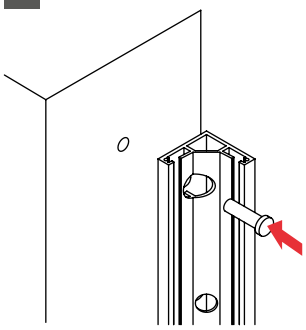

3 Place LED strip (LED STRIP*).

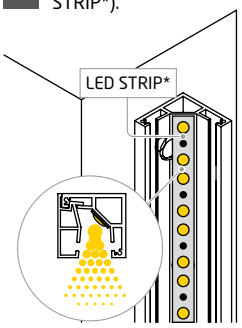

4 Fit the outer rubber in part 2.

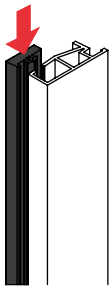

5 Mount the glass.

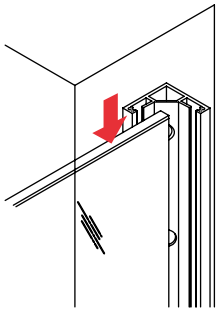

6 Anchor the part 2 assembly and the outer rubber.

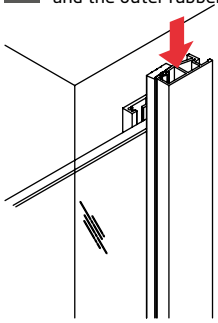

7 Fix glass with inner rubber.

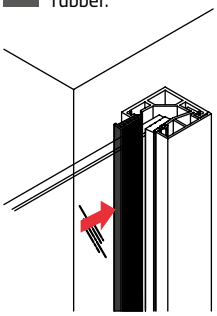

8 Place upper cap.

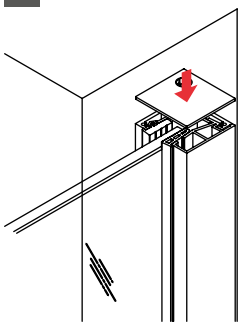

Installation options
FB-10 On the window frame / Between jambs

Side mounting: from the outside

1 Fix lower cap.

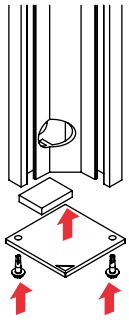

2 Anchor part 1.

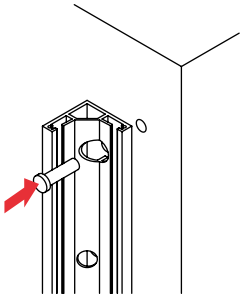

3 Place LED strip.

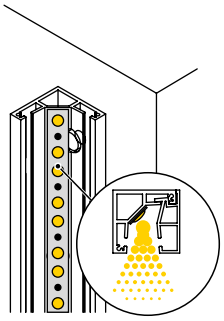

4 Fit inner rubber.

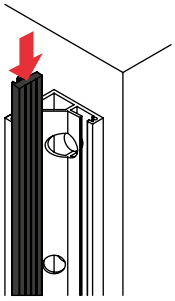

5 Mount the glass.

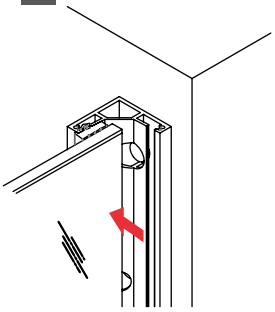

6 Fit part 2.

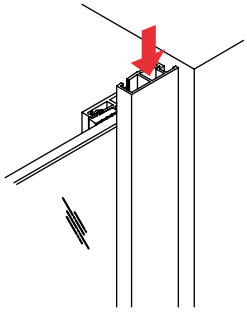

7 Fix glass with outer rubber.

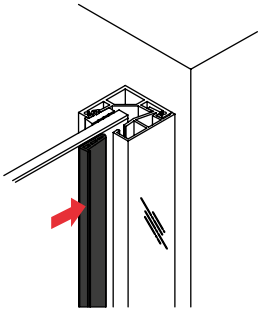

8 Place upper cap.

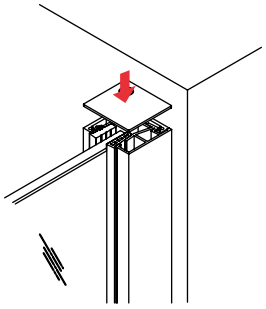

Side mounting: from the inside

1 Fix lower cap.

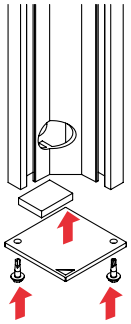

2 Anchor part 1.

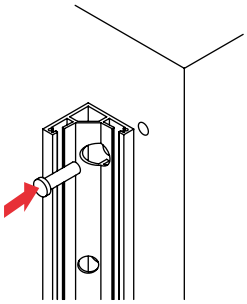

3 Place LED strip.

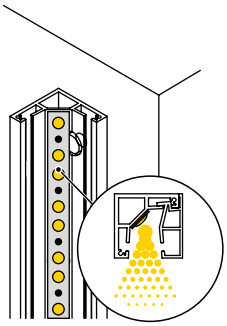

4 Fit the outer rubber in Part 2.

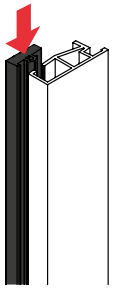

5 Mount the glass.

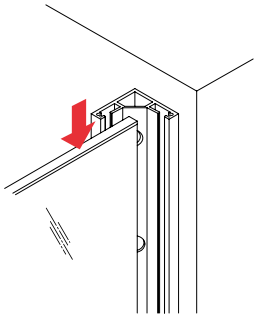

6 Anchor the part 2 assembly and the outer rubber.

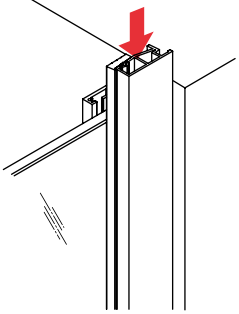

7 Fix glass with inner rubber.

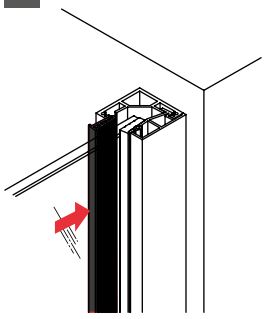

8 Place upper cap.

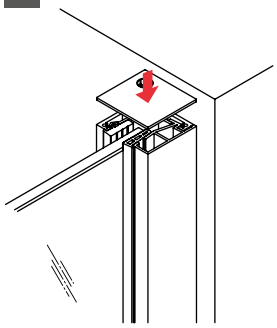

GlassFit Flow

Installation instructions

Mounting process for profile-type systems from the GlassFit Flow range, with all the details needed to ensure proper insertion, levelling, and adjustment of the glass.

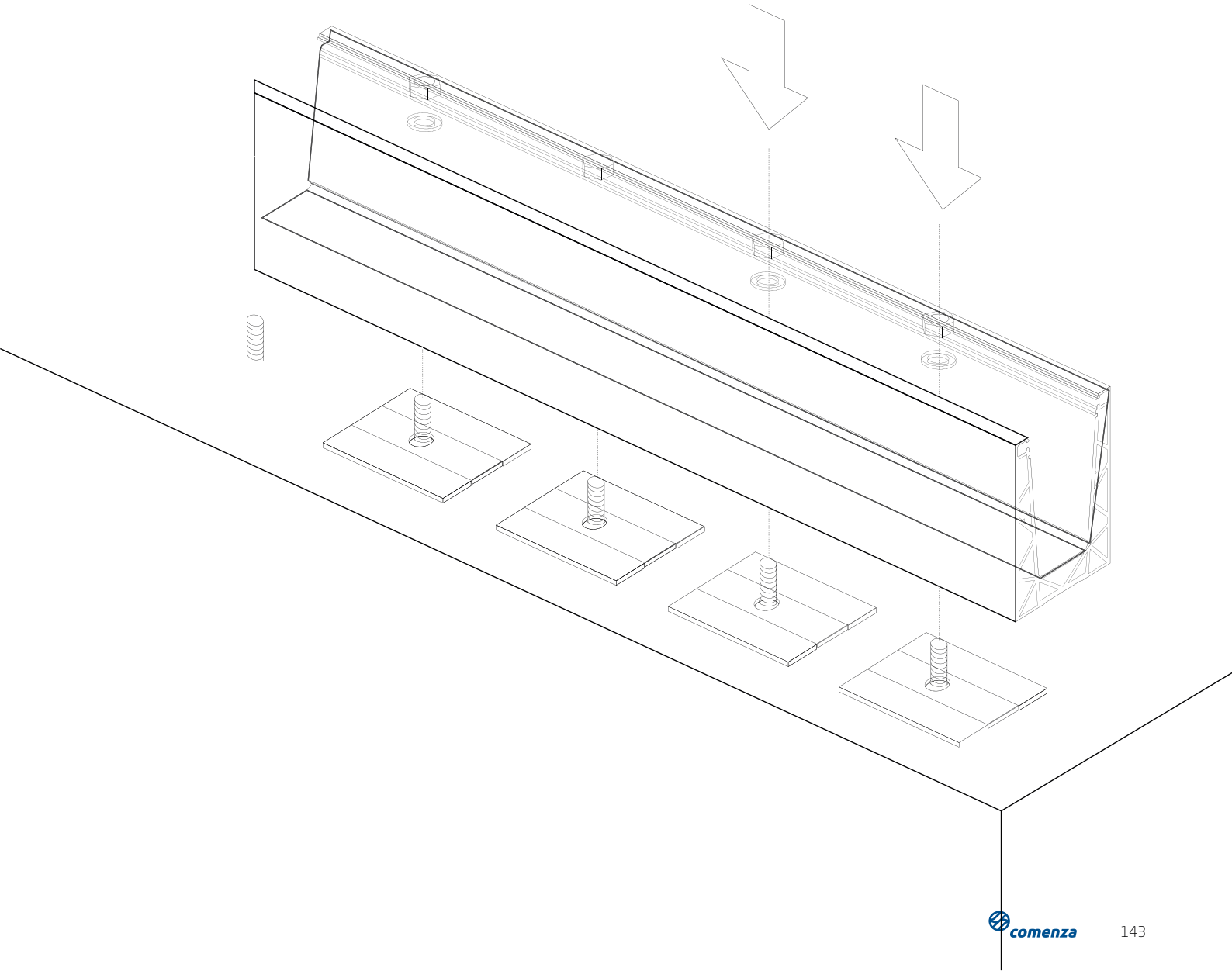

Top-mounting options

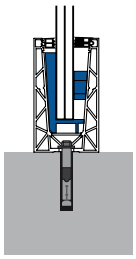

Top U-profile

Top-mount solutions with U-shaped profile are designed to adapt to different floor slab configurations, providing a versatile and precise installation. Their design facilitates efficient glass adjustment and optimizes the on-site mounting process, ensuring a properly aligned, secure, and well-integrated result.

	Top mount	
	Drainage profile	Levelling shim
SV-1401	●	●
SV-1501		
SV-1701	●	●
SV-1801	●	
SV-1801 RX		

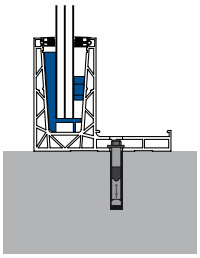

Top F-channel profile

Top-mount solutions with an F-shaped profile are designed to facilitate integration at the edge of the floor slab, adapting to different construction configurations. Their design allows for precise installation and efficient glass adjustment, optimizing the mounting process and ensuring a clean and secure result.

	Top mount			Inverted top mount		
	Drainage profile	Cladding	Levelling shim	Drainage profile	Cladding	Levelling shim
SV-1403						
SV-1703	●	●		●	●	
SV-1803		●			●	

Side-mounting options

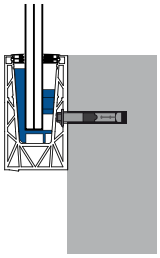

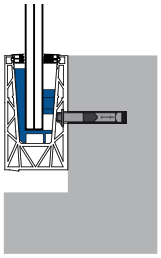

Inverted

Side U-profile

Side-mount solutions with U-shaped profile are designed to adapt to different installation configurations at the edge of the floor slab, maximizing the use of available space. Their design enables precise installation and efficient glass adjustment, ensuring a clean, secure result for the whole structure.

	Side mount		Inverted side mount	
	Drainage profile	Cladding	Drainage profile	Cladding
SV-1402	●	●		
SV-1602	●	●	●	●
SV-1702	●	●	●	●
SV-1802		●		●

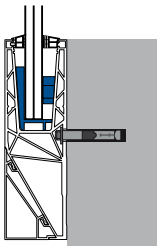

Side Y-profile

Side-mounting solutions featuring Y-shaped profiles are designed to suit specific structural configurations, allowing for versatile installation on the edge of a floor slab. Their design enables precise glass adjustment and efficient installation on site, ensuring a safe result that is well integrated into the overall design.

	Side mount		Inverted side mount	
	Drainage profile	Cladding	Drainage profile	Cladding
SV-1404		●		
SV-1704	●	●	●	●

Installation instructions
Top U-profile

1 Anchor the profile to the slab. Place the drainage profile, if applicable.

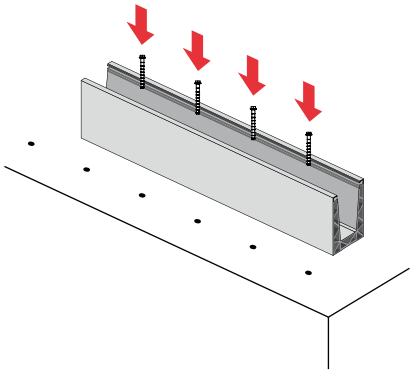

Drainage profile

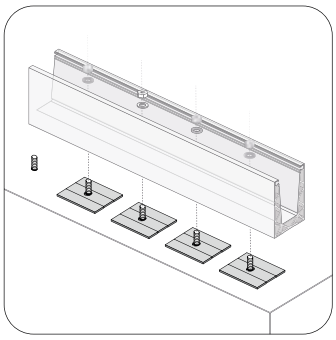

Inner drainage

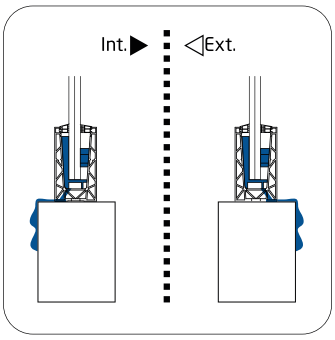

2 Place the levelling shim.

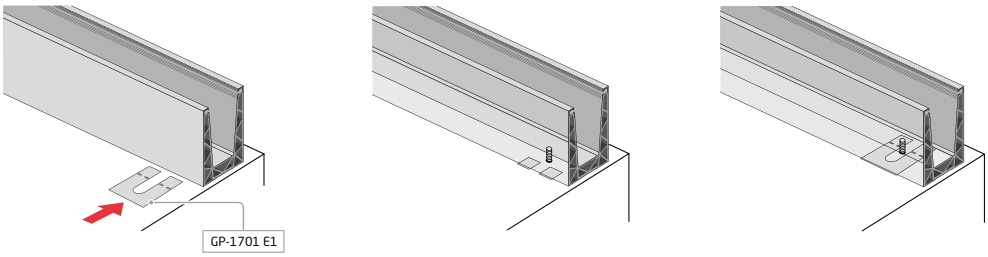

3 Place the connection pin to align profiles.

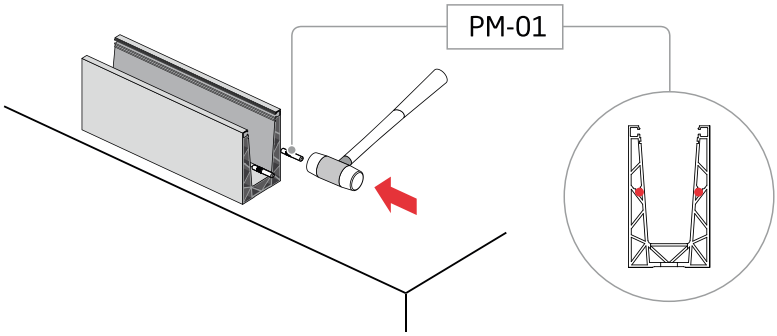

4 Glue the side cap.

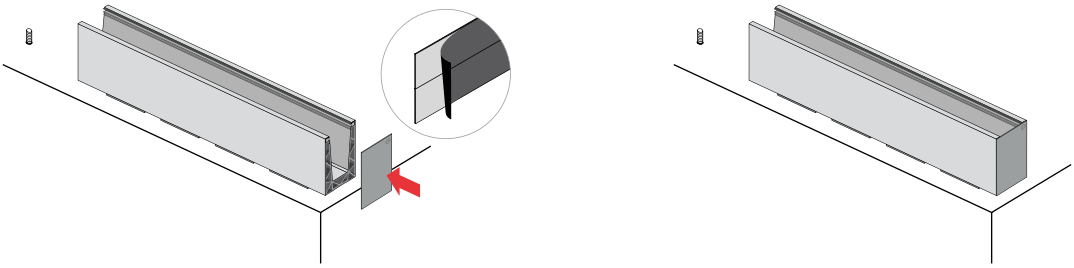

Installation instructions
Top F-channel profile

1 Anchor the profile to the slab. Place the drainage profile, if applicable.

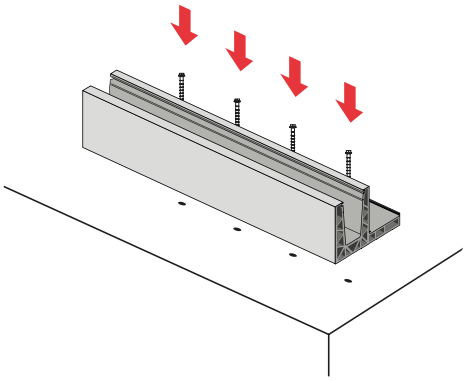

Drainage profile

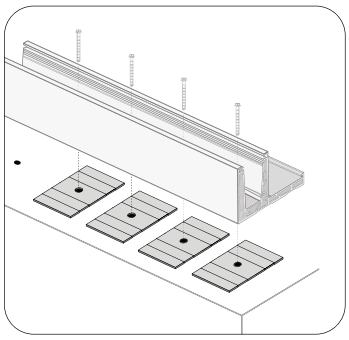

Inner drainage

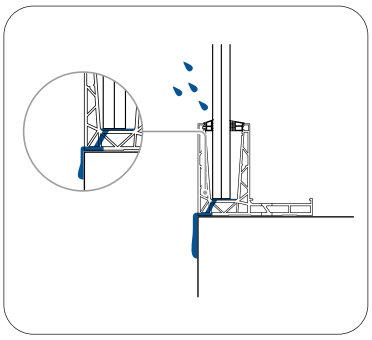

2 Place the connection pin to align profiles.

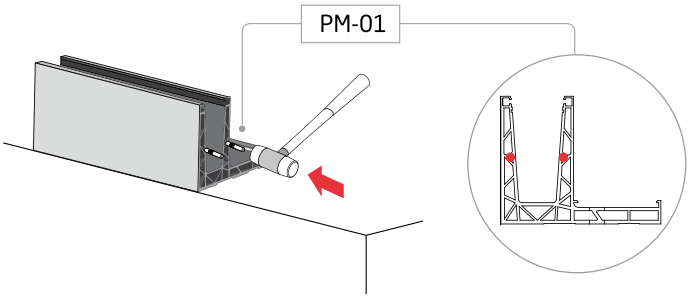

3 Install the cladding.

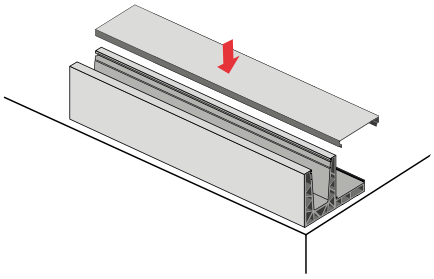

4 Installation of the trim profile for ventilated rainscreen systems.

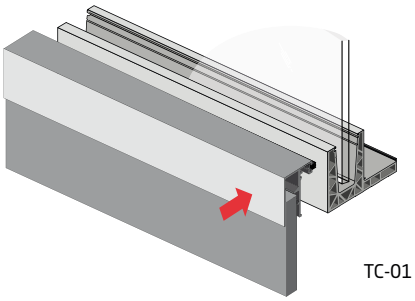

5 Glue the side cap.

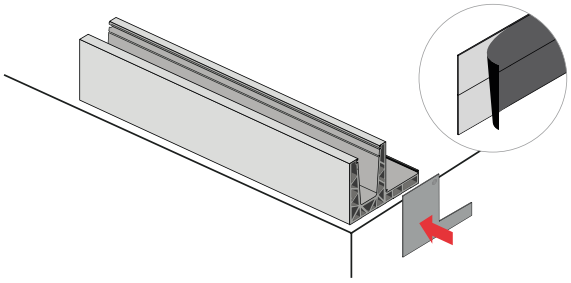

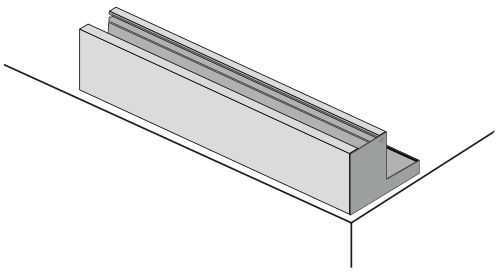

Installation instructions
Side U-profile

1 Anchor the profile to the slab. Place the drainage profile, if applicable.

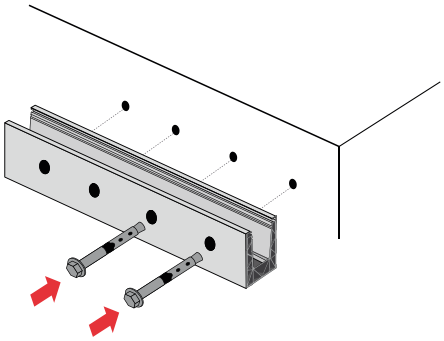

Drainage profile

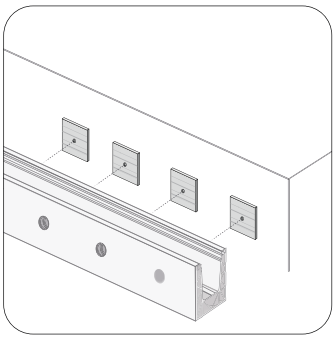

Inner drainage

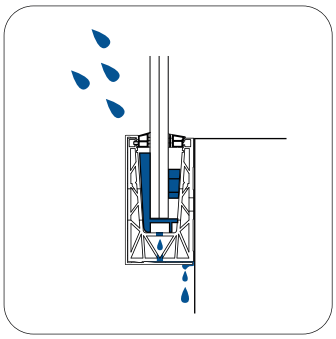

2 Place the connection pin to align profiles.

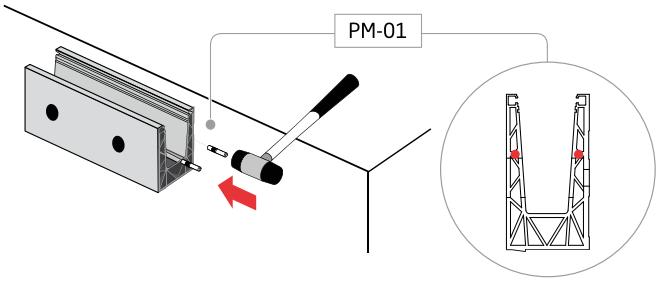

3 Install end cap.

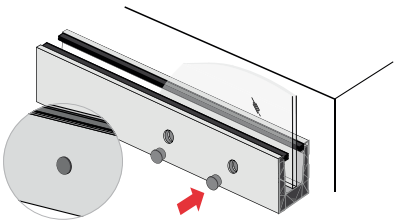

TF-580

- Install side cap.

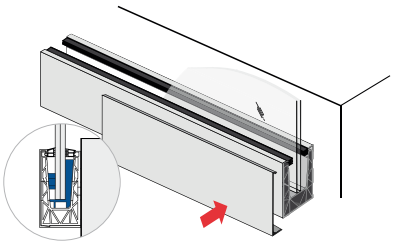

- Installation of the trim profile for ventilated rainscreen systems.

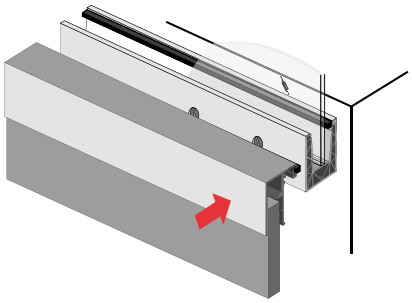

4 Glue the side cap.

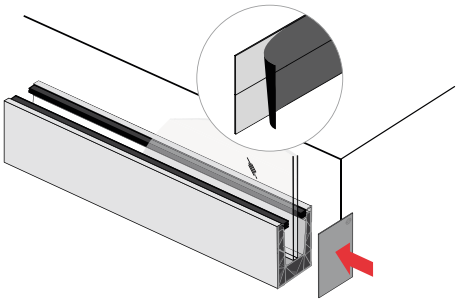

Installation instructions
Side Y-profile

1 Anchor the profile to the slab. Place the drainage profile, if applicable.

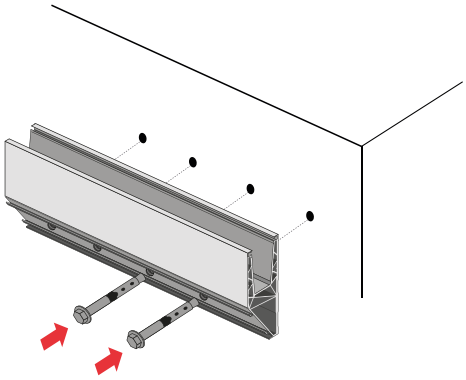

Drainage profile

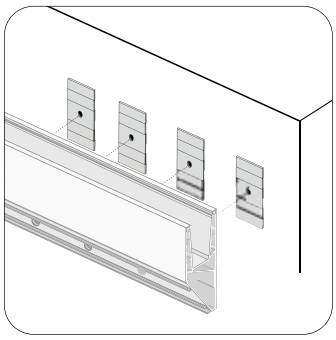

Inner drainage

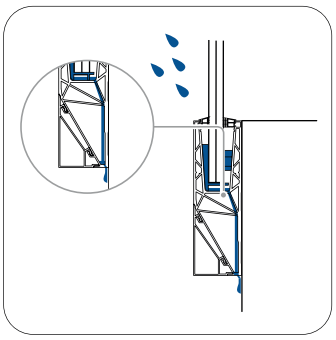

2 Place the connection pin to align profiles.

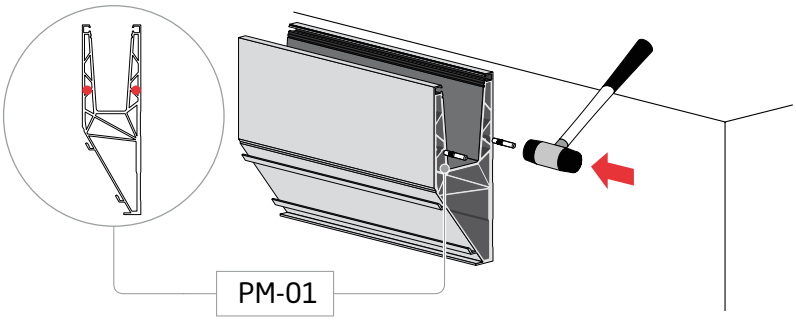

3 Place side cap.

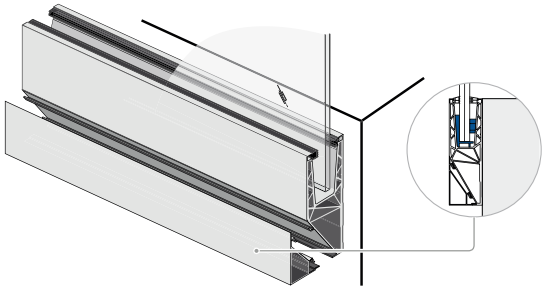

● Installation of the rainscreen trim profile.

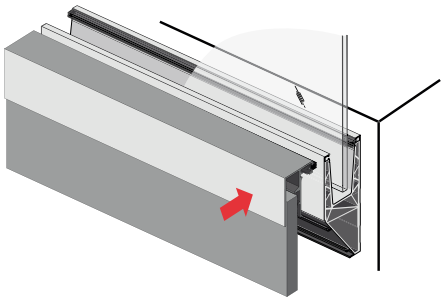

4 Glue side cap.

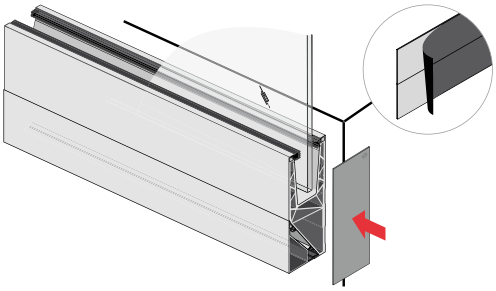

Installation instructions
Inverted side U-profile

1 Anchor the profile to the slab. Place the drainage profile, if applicable.

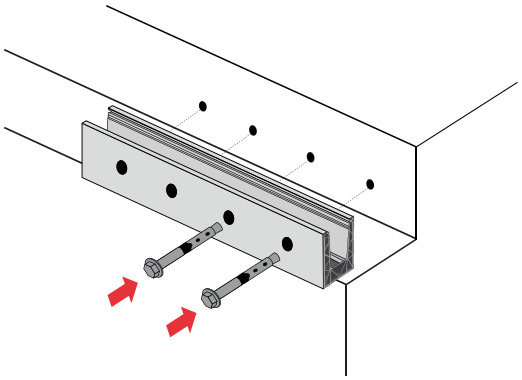

Drainage profile

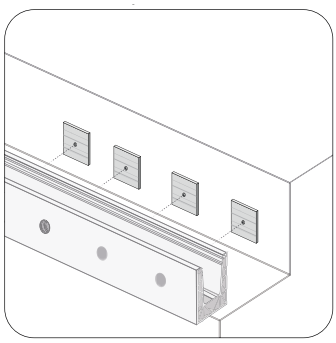

Inner drainage

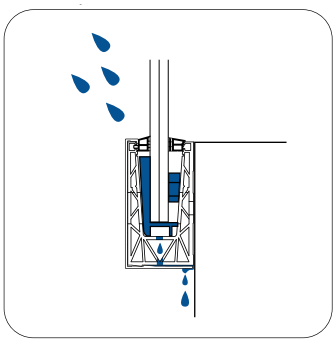

2 Place the connection pin to align profiles.

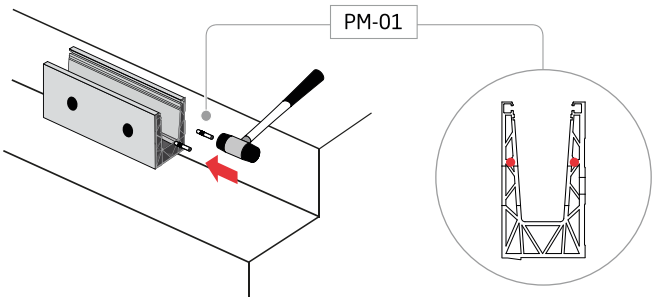

3 Install the cover or cladding.

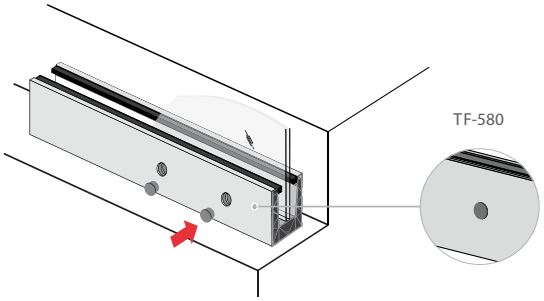

● Install the cladding.

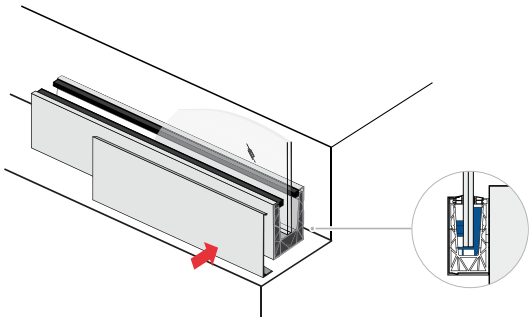

4 Place side cap.

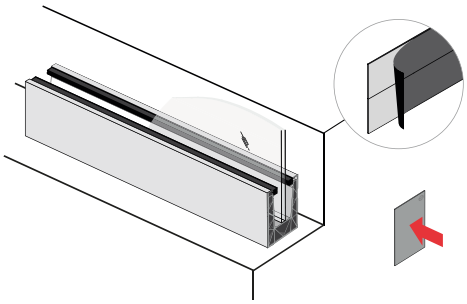

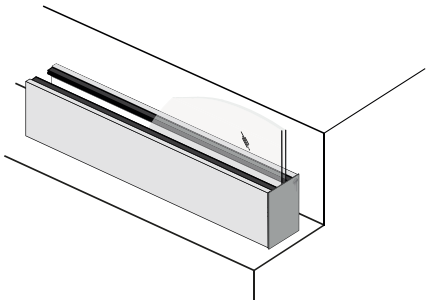

Glazing systems

Installation instructions

Information on the use of glazing systems, including the installation of the glass and the components required for its fixing and adjustment.

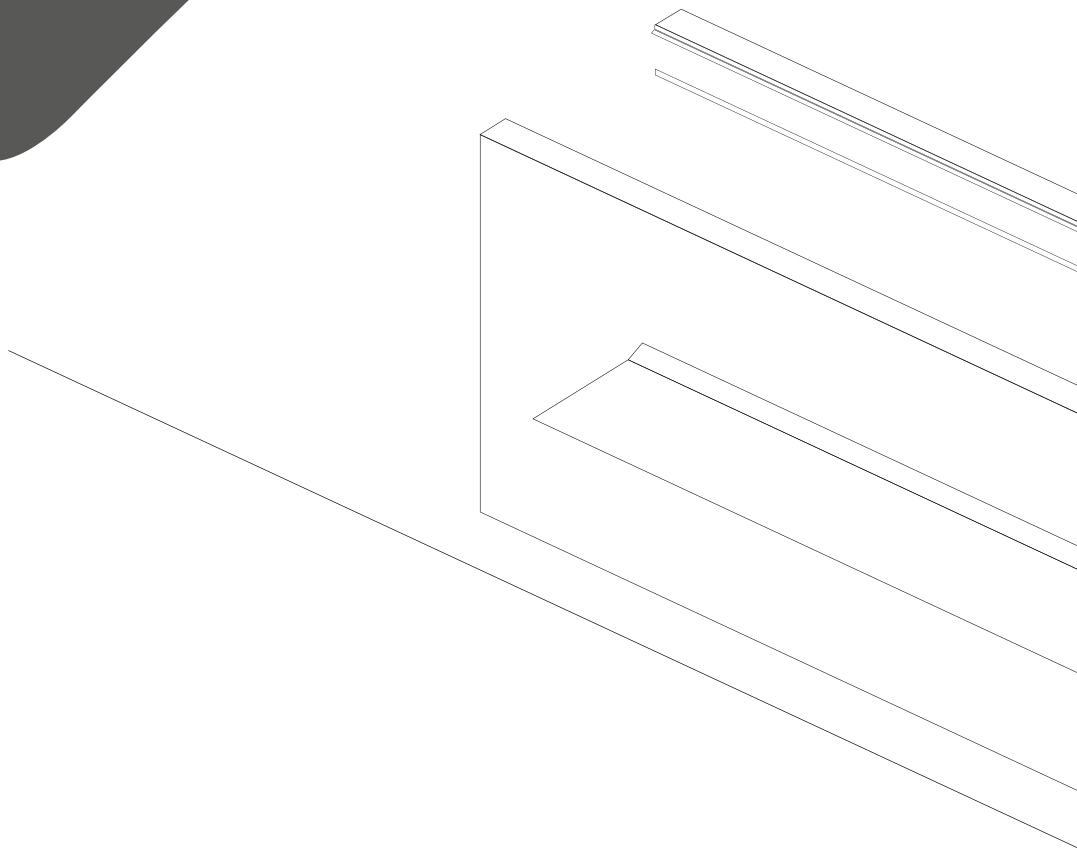

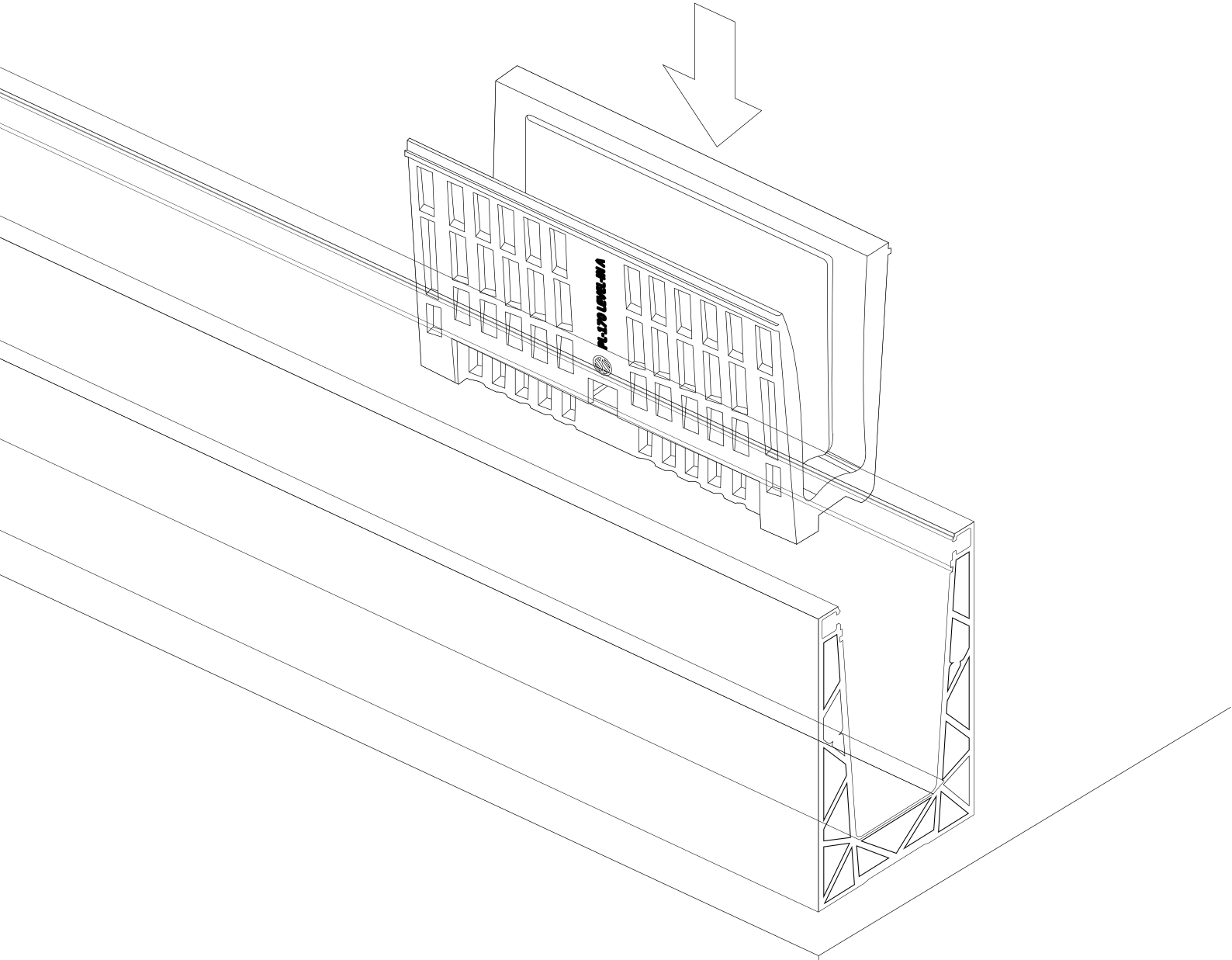
PK-270 LEVEL-A/A

Glazing system with levelling feature

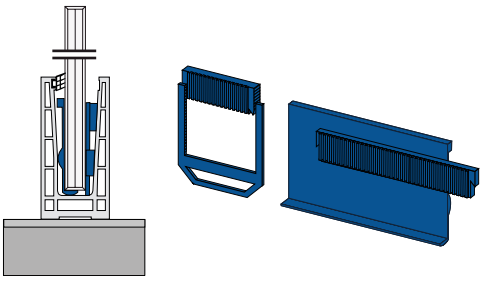

PL-14 Level In

The PL-14 Level In glazing system is a solution designed to facilitate the quick and precise levelling and alignment of glass panels. Its system of shims, gaskets and wedges guarantees efficient on-site adjustments, optimizing the installation process and ensuring a uniform finish.

	PL-14 (Level-In)
SV-1401	●
SV-1402	●
SV-1403	●
SV-1404	●

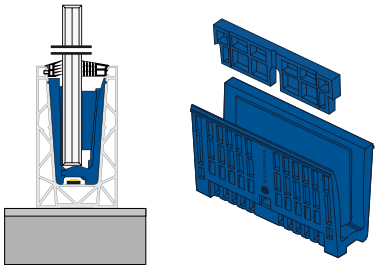

PL-170 Level In+

The PL-170 Level In+ glazing system is an advanced solution designed to optimise the levelling and fixing of glass with maximum precision. It can be installed from the inside, thus removing auxiliary equipment and improving safety on site. Furthermore, as fixing can be performed independently, the glass can be adjusted with maximum precision, optimising installation time and costs.

	PL-170 (Level-In+ KIT)
SV-1602	●
SV-1701	●
SV-1702	●
SV-1703	●
SV-1704	●

Glazing system with no levelling feature

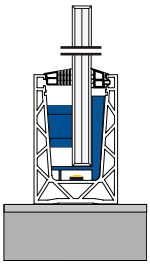

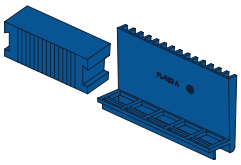

PL-150 / PL-170 / PL-180

	PL-150 KIT	PL-170 KIT	PL-170 IC KIT	PL-170 KIT-S	PL-170 IC KIT-S	PL-170 PT KIT	PL-170 PT KIT-S	PL-180
SV-1501	●							
SV-1602		●	●	●	●	●		
SV-1701		●		●				
SV-1702		●	●	●	●	●	●	
SV-1703		●				●	●	
SV-1704		●				●	●	
SV-1801								●
SV-1801 RX								●
SV-1802								●
SV-1803								●

1 Place the shims.

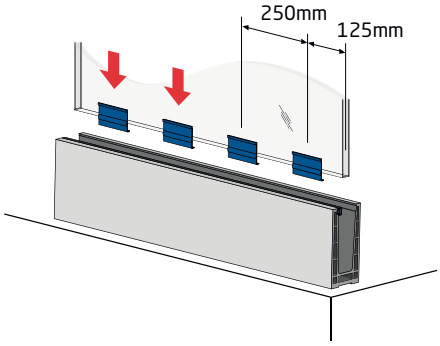

2 Place the outer rubber.

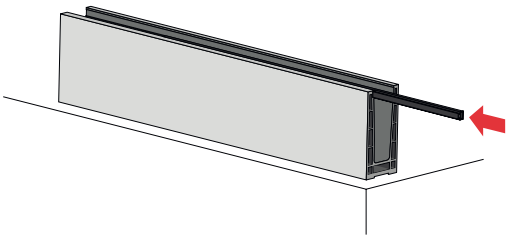

3 Place the glass, tilted outwards.

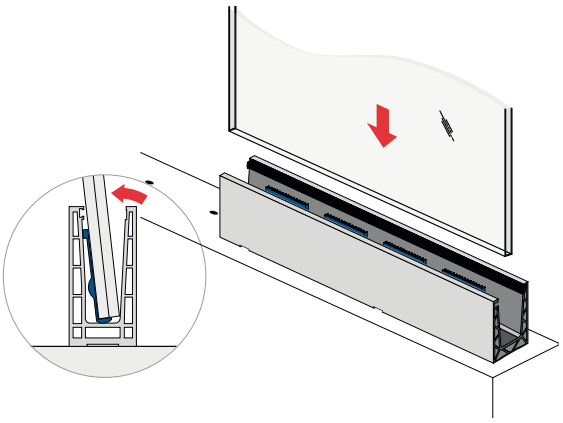

4 Place the lower shims.

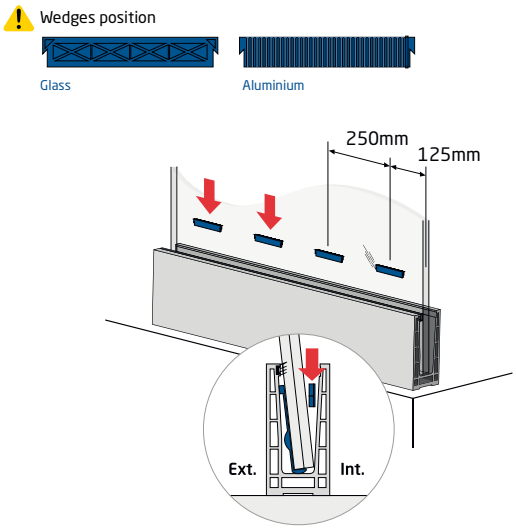

5 Place the upper shims.

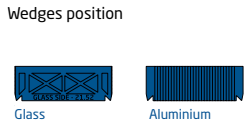

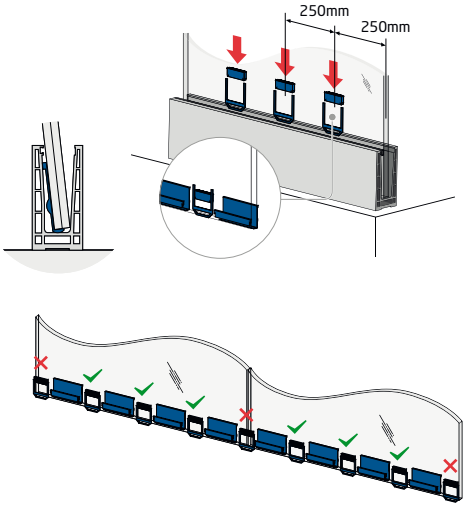

Installation instructions
PL-14 Level-In

Description of the complete installation process for the Level-In PL-14 levelling system. The installation steps also apply to the SV-1401, SV-1402, SV-1403 and SV-1404 systems.
Differences between profiles are indicated exclusively in the technical tables included for each system.

6 Apply pressure to the lower wedges until the glass is levelled.

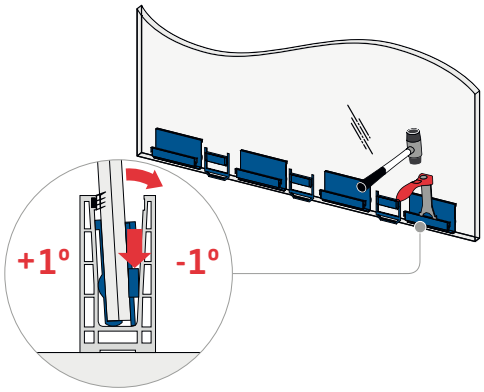

7 Apply pressure to the upper wedges until the glass is fixed.

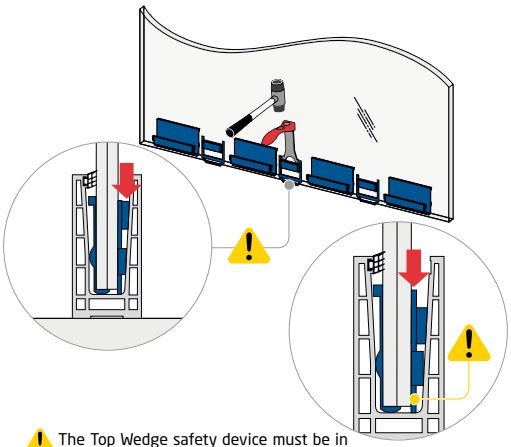

The Top Wedge safety device must be in contact with the inner base of the profile.

8 Place the inner rubber.

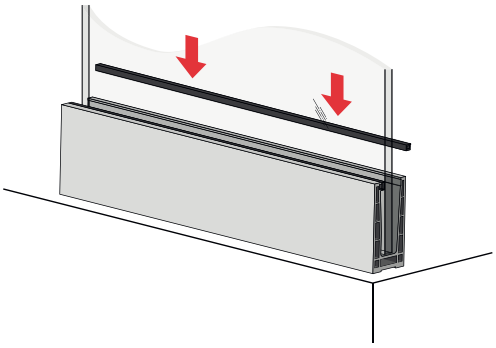

9 Place the gasket between the panels of glass.

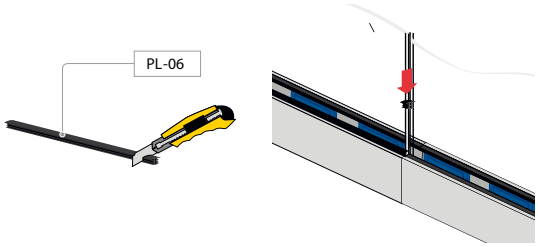

***** Installation of the MD-01 device to prevent the glass from slipping in installations with sloping sections.

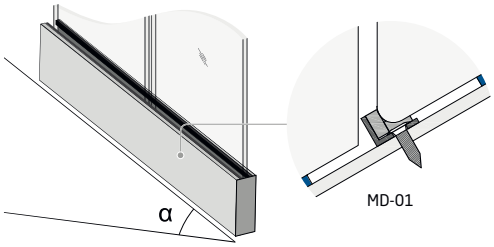

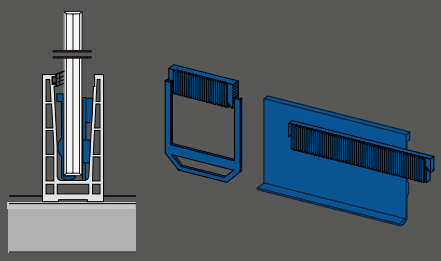

Tools for installation

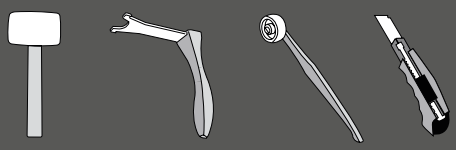

1 Installation of the LED light strip.

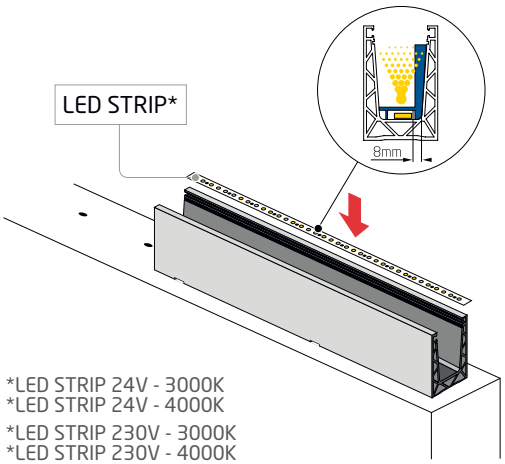

*LED STRIP 24V - 3000K
*LED STRIP 24V - 4000K

*LED STRIP 230V - 3000K
*LED STRIP 230V - 4000K

*LED COB STRIP 230V - 3000K
*LED COB STRIP 230V - 4000K

2 Place the shims.

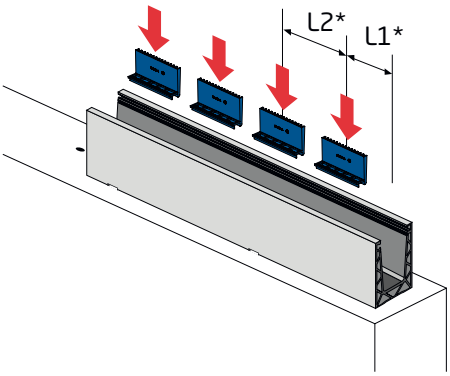

3 Place the outer rubber.

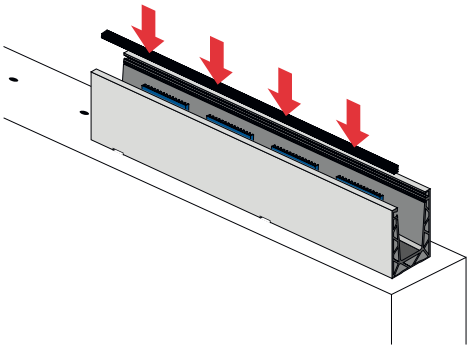

4 Mount the glass.

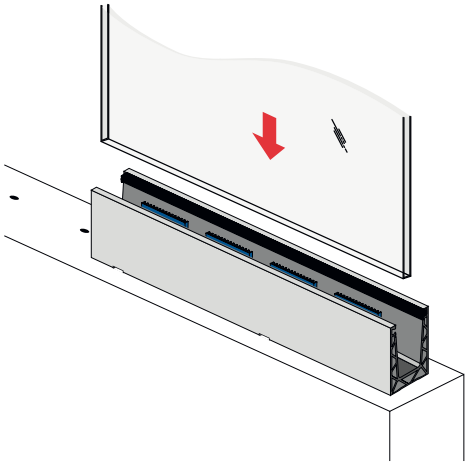

Installation instructions

PL-150 / PL-170 PL-180 KIT

Description of the complete installation process for the PL-150, PL-170 and PL-180 glazing kits.

The installation steps are the same for all kits and their compatible profiles.

5 Place the wedges and fix the glass.

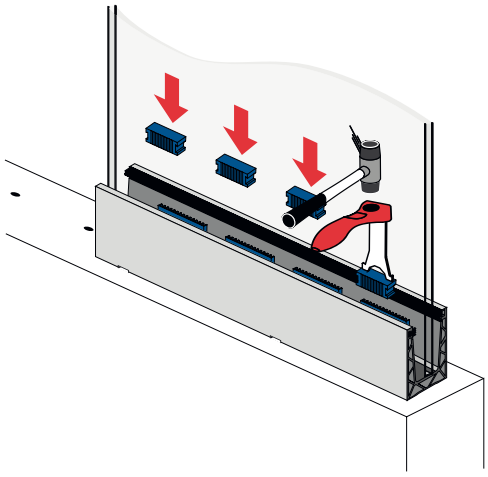

6 If it is necessary to correct the position of the glass, remove the wedges.

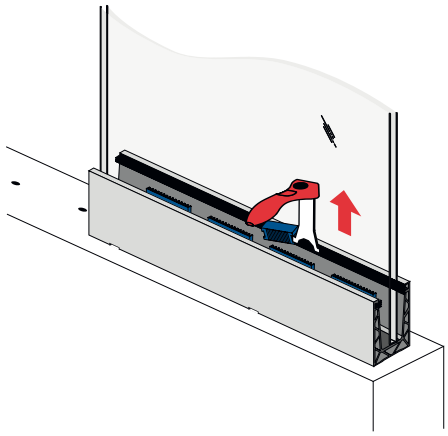

7 Place the inner rubber.

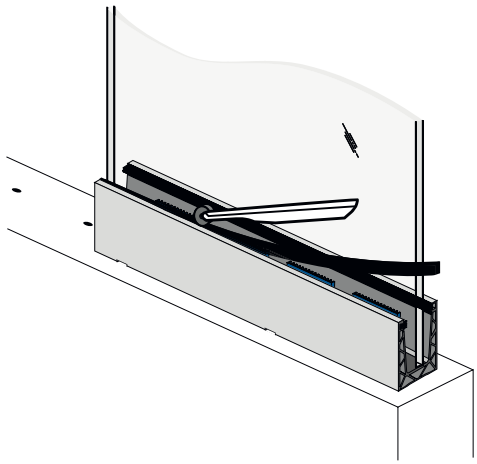

8 Install the rubber between glass panels.

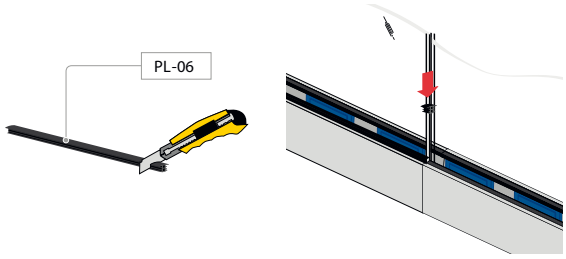

* Installation of the MD-02 L and MD-02 R device to prevent the glass from slipping in installations with sloping sections.

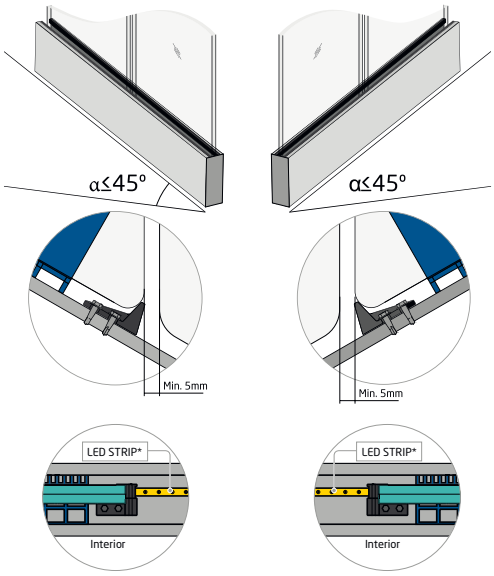

For each glass panel, all glazing shims must be installed at the same depth to ensure uniform distribution of clamping pressure on the glass.

Compatible with LED lighting

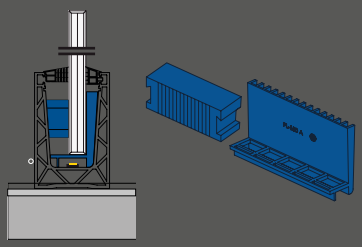

Tools for installation

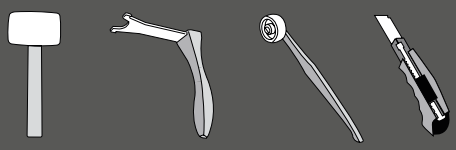

1 Install the LED STRIP* lighting system.

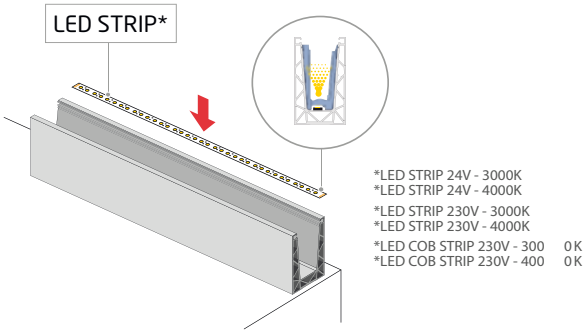

2 Install all pre-assembled A-B components at 250 mm intervals, aligned with the anchors (also spaced 250 mm apart). In profiles with internal machining, ensure that the adjustment screw does not coincide with the machined opening.
On ramps and inclined sections, once installed, the components remain fixed in position.

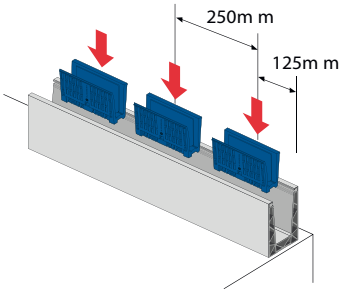

3 Install the outer rubber.
We recommend installing it from top to bottom.
If preferred, to make installation easier, dampen with a soapy solution.

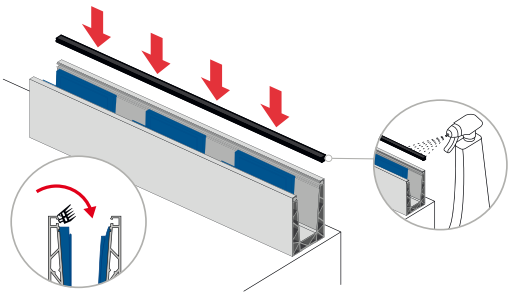

4 Mount the glass.

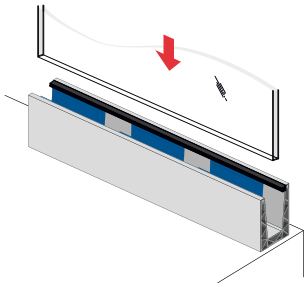

5 All the wedges (C) are installed to "pre-fix" the glass so that it rests on the levelling piece (B), using a plastic sheet.

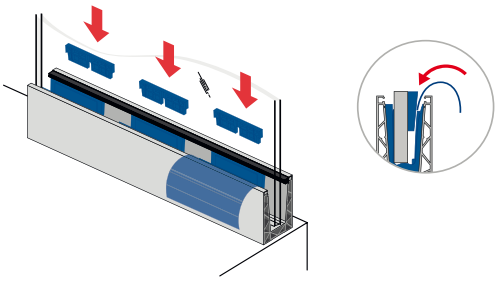

6 Each piece is adjusted by turning the screw until the glass is in vertical position.
Clockwise rotation --> levelling towards the inside
Counterclockwise rotation --> levelling towards the outside
Check that the adjustment of each kit is similar, to avoid twisting the glass.

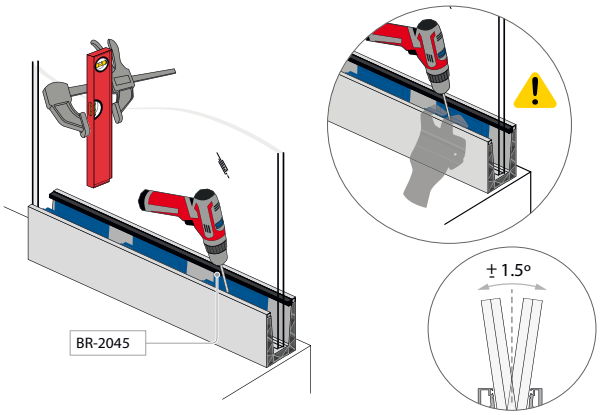

To level the glass, use a spirit level held in place with a clamp and press the wedge to eliminate the gap between the glass and the kit as part B slides during the levelling process. Once the glass has been levelled, lightly tighten the wedge and check its stability. If it is no longer level, repeat the adjustment without loosening the wedge.

Installation instructions
PL-170 Level-IN+

Description of the complete installation process for the PL-170 Level-IN+ levelling system. The installation steps also apply to the SV-1602, SV-1701, SV-1702, SV-1703 and SV-1704 systems.
Differences between profiles are indicated exclusively in the technical tables included for each system.

7 Next section.
As in Steps 2 and 3, install the components in their final position, maintaining a spacing of 250 mm, aligned with the anchors. In profiles with internal machining, ensure that the adjustment screw does not coincide with the machined opening.

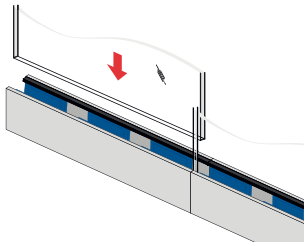

8 Second glass
Make sure that both panels of glass are levelled using the Level-In+ system, noting how the glass moves as you turn the screwdriver.

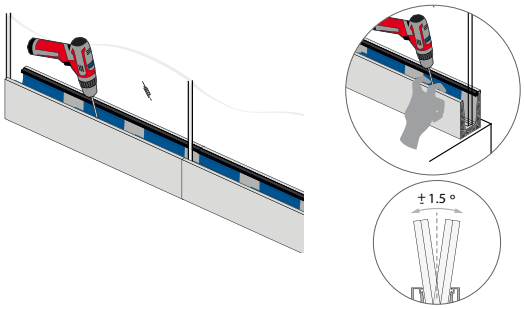

9 Second glass
Once all the panels are aligned, proceed to tighten all the wedges fully.

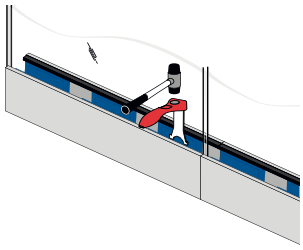

10 Place the inner rubber (E). Depending on the thickness of the glass, it may be necessary to remove some of the rubber strips.

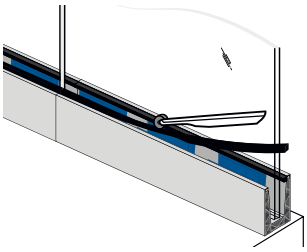

11 Install the rubber between glass panels.

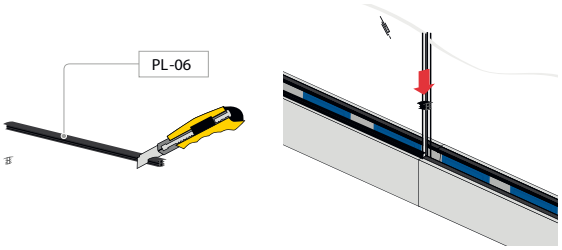

12 MD-02 L, MD-02 R
Safety device to prevent the glass from slipping when installing the railing on a slope.

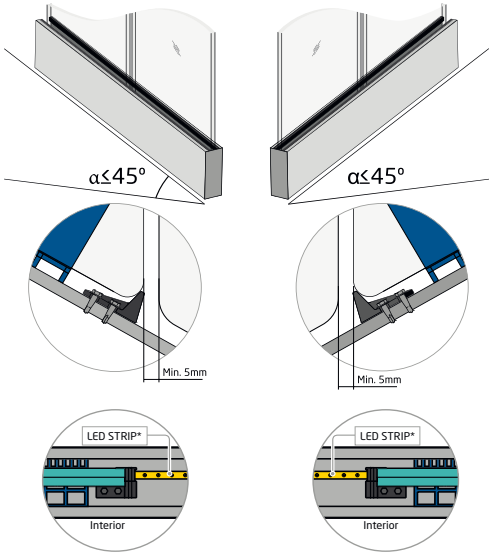

For each glass panel, all shims and the glazing U-channel must be installed at the same depth to ensure uniform distribution of clamping pressure on the glass.

Tools for installation

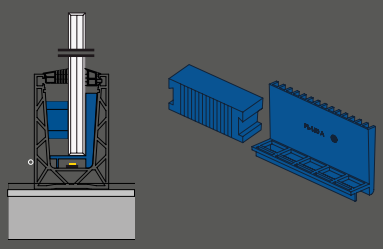

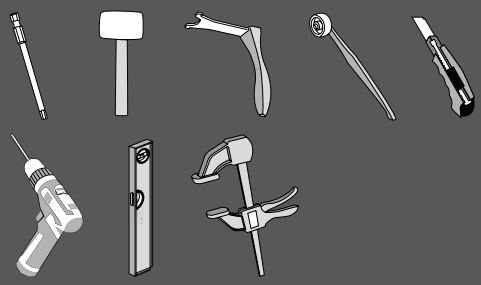

Handrails

Installation instructions

Installation of handrail systems, with instructions for mounting brackets, tubes, and fixing elements to ensure a seamless finish and a durable attachment.

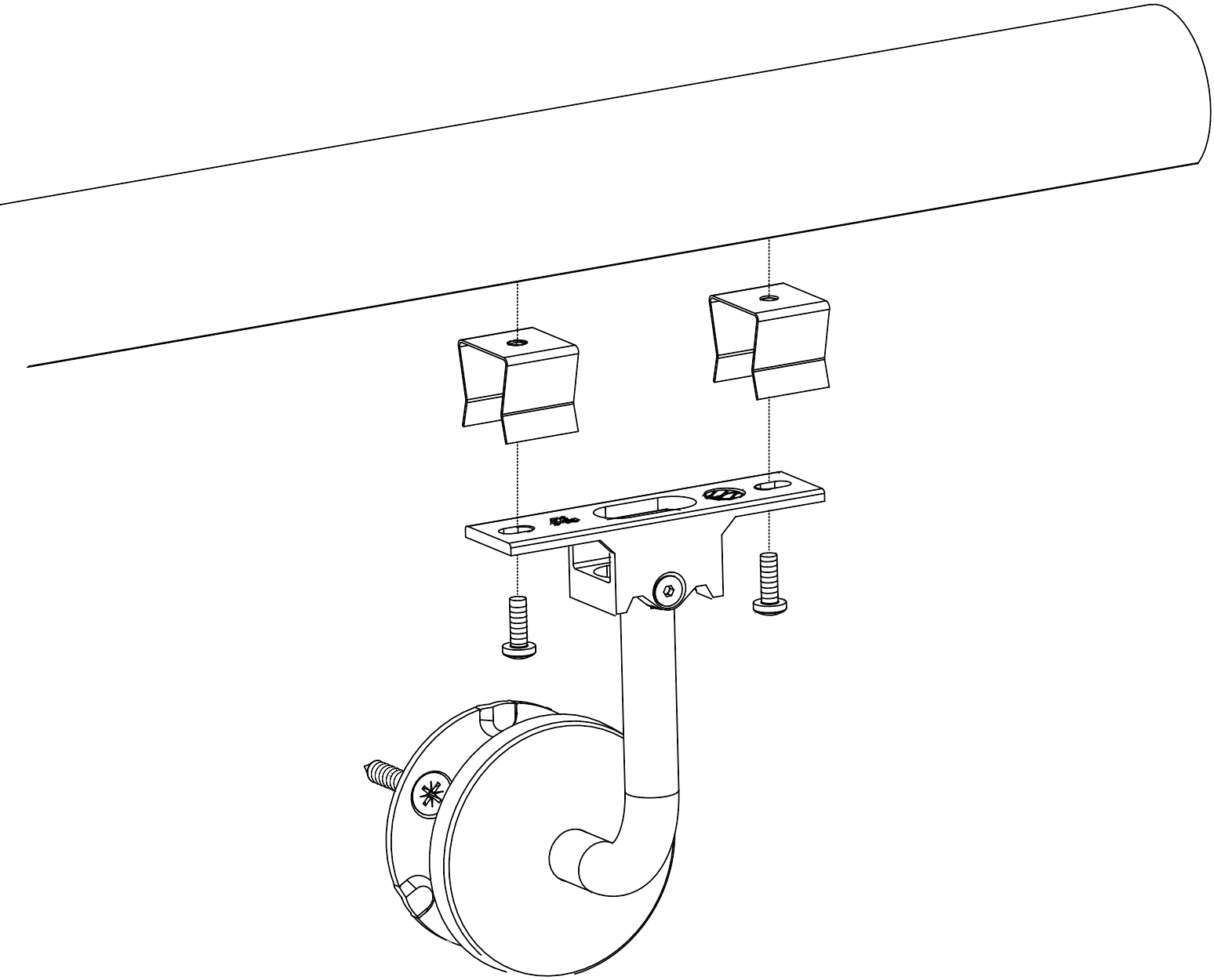

Installation instructions
U-shaped tube and accessories

AV-605 Installation

1

2

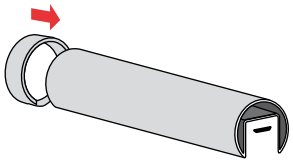

3

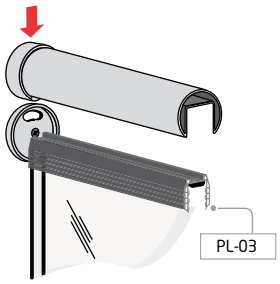

4

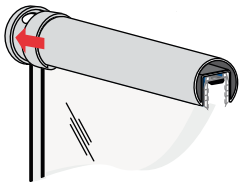

5

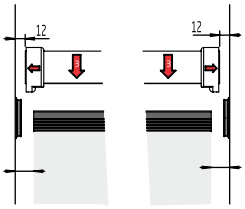

6

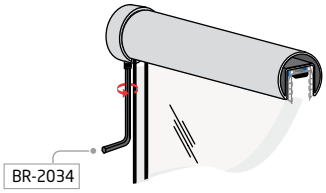

SV-1260 / SV-1255 Installation

1

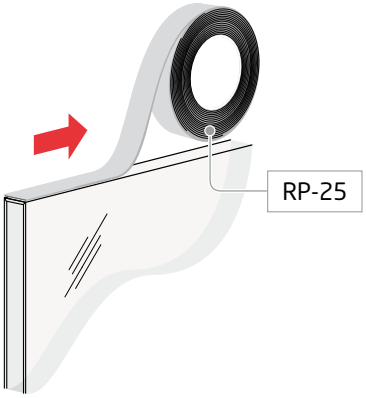

2

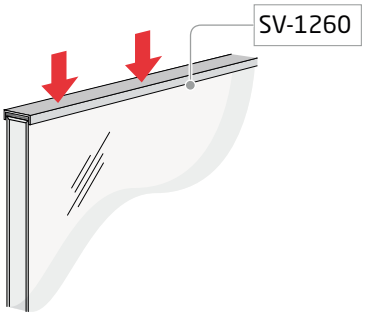

Installation instructions
Connection clamps

CC-736 Installation

1

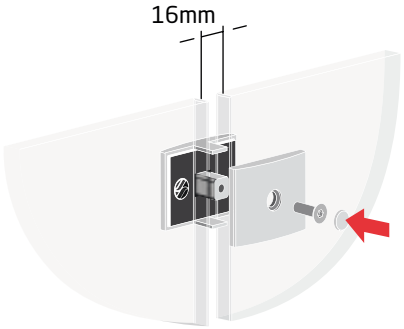

CC-737 Installation

2

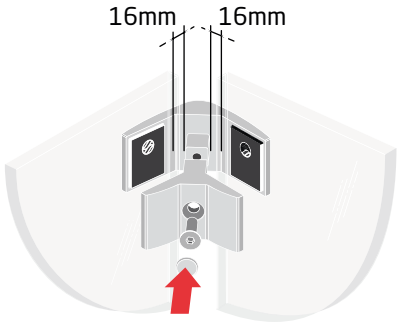

CC-735 Installation

1

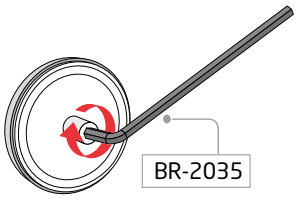

2

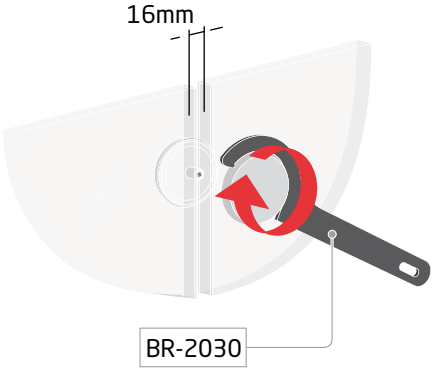

Installation instructions
DecoLed

1

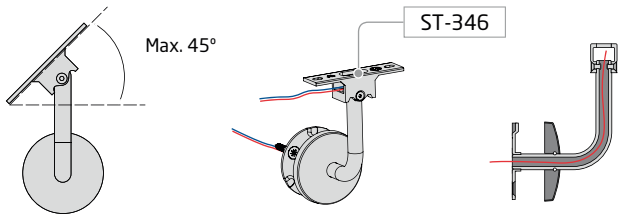

2 Two AL-00 parts per linear meter.

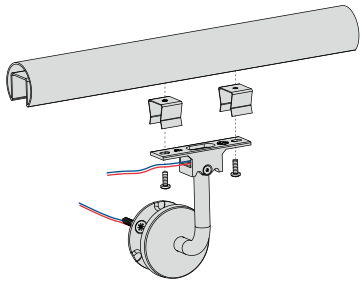

3 Drill with a Ø 3 mm metal drill bit. M4 thread tap.

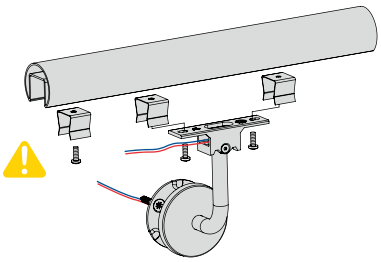

4

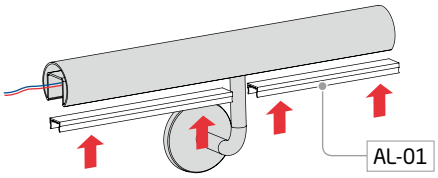

5

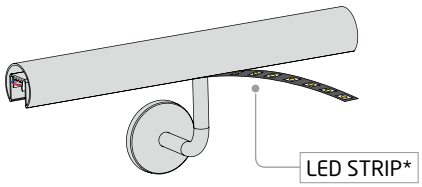

*LED STRIP 24V - 3000K
*LED STRIP 24V - 4000K

*LED STRIP 230V - 3000K
*LED STRIP 230V - 4000K

*LED COB STRIP 230V - 3000K
*LED COB STRIP 230V - 4000K

6

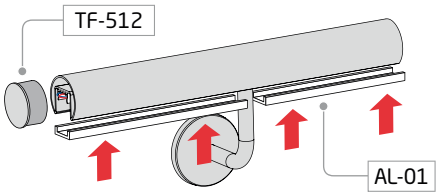

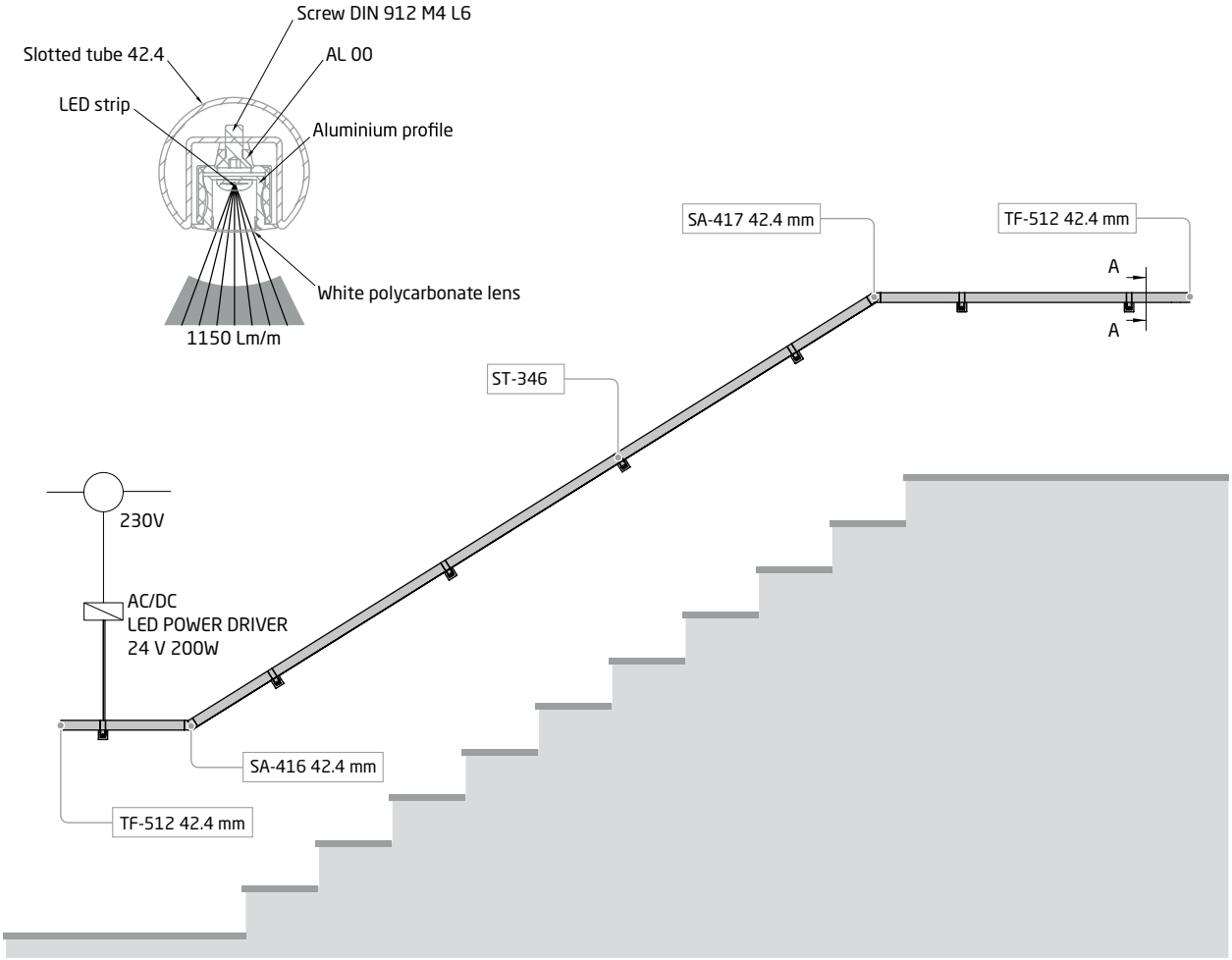

Wiring diagram

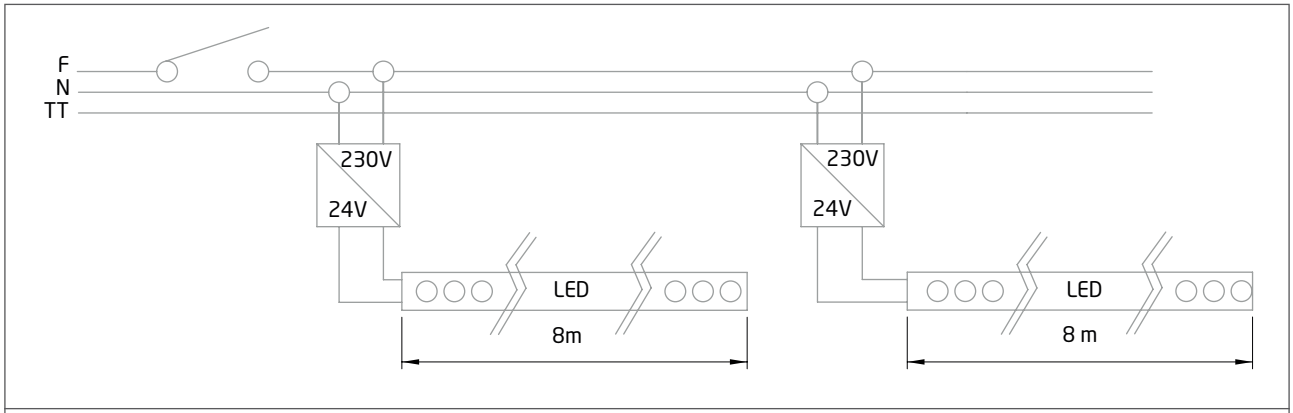

F	Phase		Switch
N	Neutral		230V Input / 24V Output
TT	Earthing system		LED strip

*NOTE: The maximum length and number of LED strips to be installed for each transformer must be calculated by a qualified electrician based on the specific conditions of each installation (wiring diagram, length and cross-sectional area of the cables used, etc.).

Installation instructions
Sekkei

Installation of **ST-354**

1

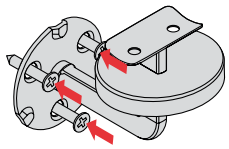

2

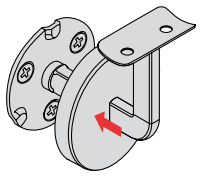

3

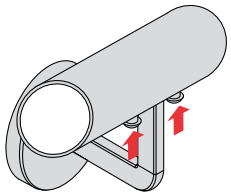

Installation of **ST-356 / ST-356 FLAT**

1

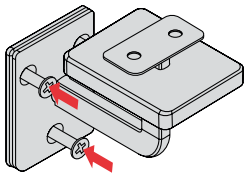

2

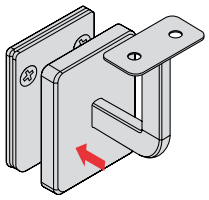

3

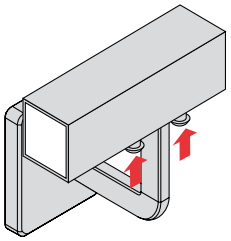

Installation of **ST-358**

1

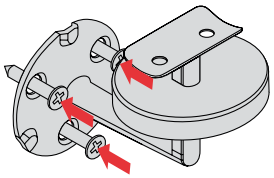

2

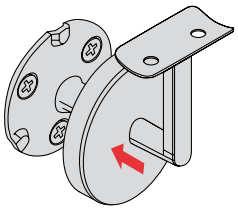

3

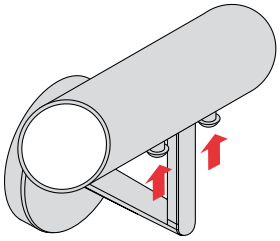

Installation instructions
Flex-Height

Installation of **SA-490**

1

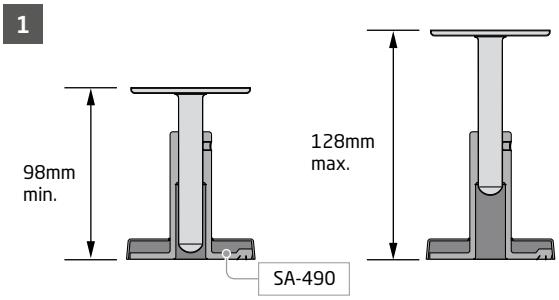

2

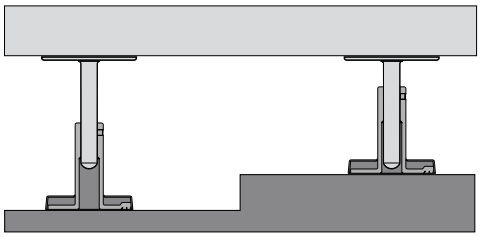

Installation instructions
Stand-Rail

Installation of **ST-353**

1

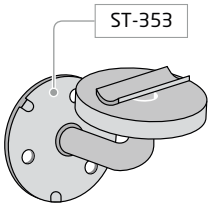

2

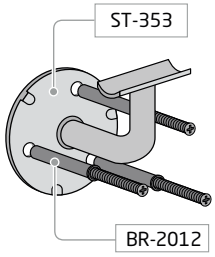

3

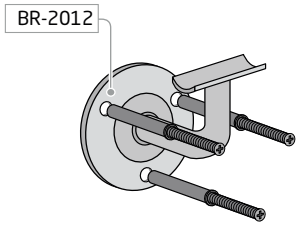

The bracket is designed to allow installation in a single operation using pre-assembled wall plugs. Once the bracket has been installed and securely fixed to the supporting surface, attach the cover by applying light pressure to the base, concealing the rubber insert inside. [1]

Installation steps with ST-353:

1. Drill a hole in the wall 2. Place the part 3. Fix the bracket to the wall using the pre-fitted wall plug [2]

Installation of **ST-340**

1

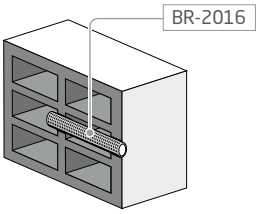

2

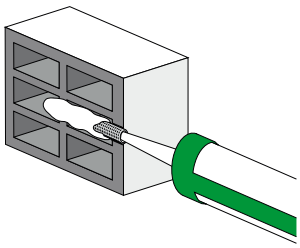

3

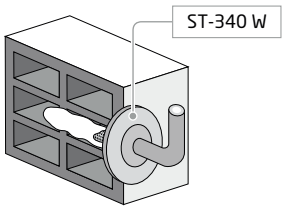

Installation instructions
Equal

Installation of **ST-334 FLAT**

1

2

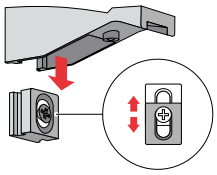

3

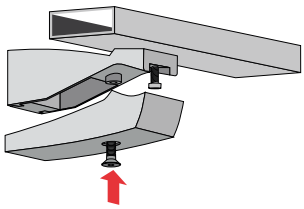

GlassFit Frame

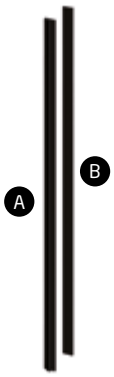

PL-10 KIT

A /	B /	G	LG
2	2	12.38-13.52	1100

Glazing kit for FB-10

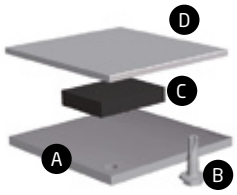

EC-FB10-KIT

A /	B /	C /	D /
2	4	2	2

Caps kit for FB-10

Minimal Post

PL-200 KIT

	G	LG
1	12.38-12.76	2100

Glazing kit for railing systems with posts MT-200, MT-200-C

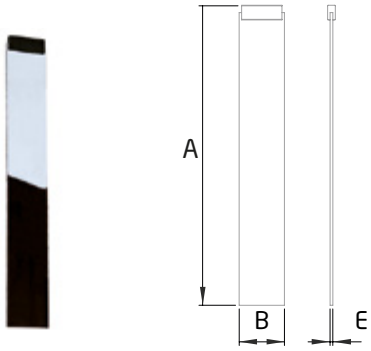

PM-200 KIT

BA

	A	B	E
1	164	25	1.5

Staircase kit MT-200, MT-201

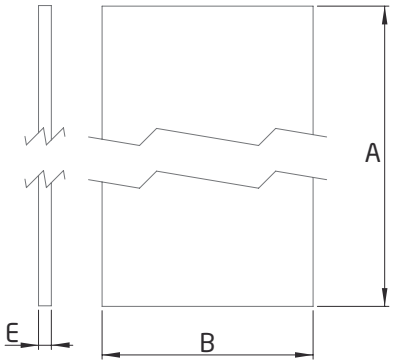

EC-200-1 AISI-316

BA

	A	B	E
1	1080	25	1.5

Side platen for post MT-200, left or right mounting

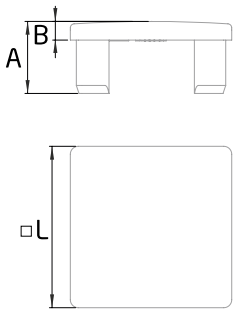

TF-540 AISI-316

BA

	□L	A	B
2	60x60	28	7

End cap for post MT-200, MT-201 central, left or right mounting

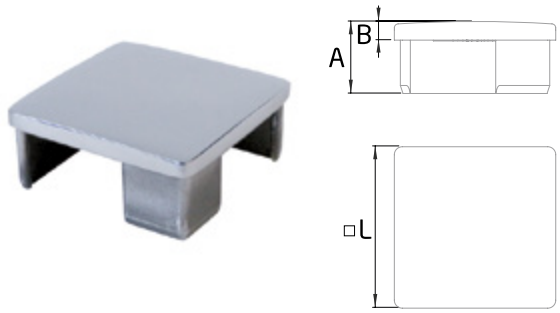

TF-540-C AISI-316

BA

	□L	A	B
2	60x60	28	7

End cap for post MT-200-C, MT-201-C

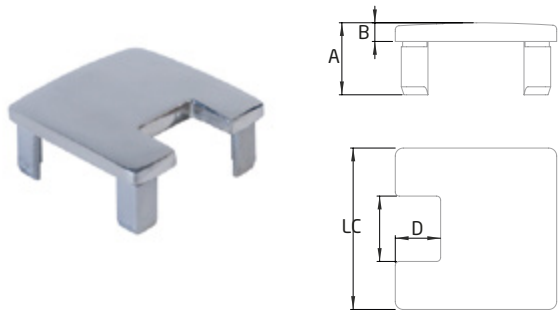

TF-541-L/R AISI-316

BA

	□ L	A	B	C	D
2	60x60	28	7	24	17

End cap for post MT-200, MT-201 left or right mounting

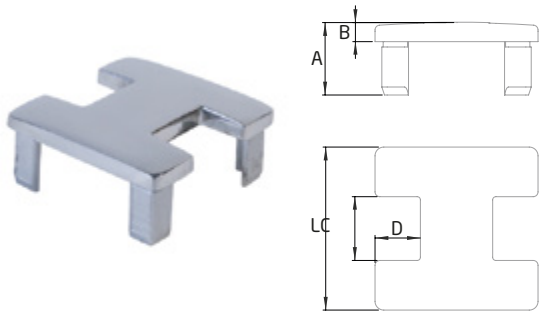

TF-541-M AISI-316

BA

	□ L	A	B	C	D
2	60x60	28	7	24	17

End cap for post MT-200, MT-201 central mounting

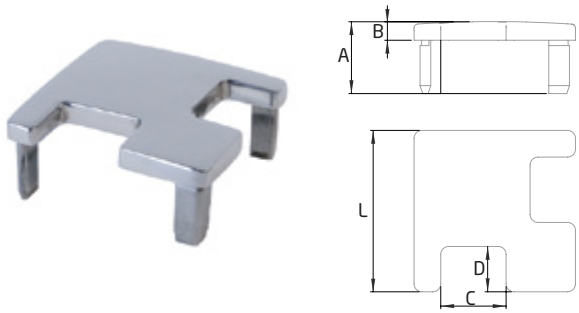

TF-541-C AISI-316

BA

	□ L	A	B	C	D
2	60x60	28	7	24	17

End cap for post MT-200-C, MT-201-C

PL-201 KIT

	G	LG
1	12.38-12.76	1100

Glazing kit

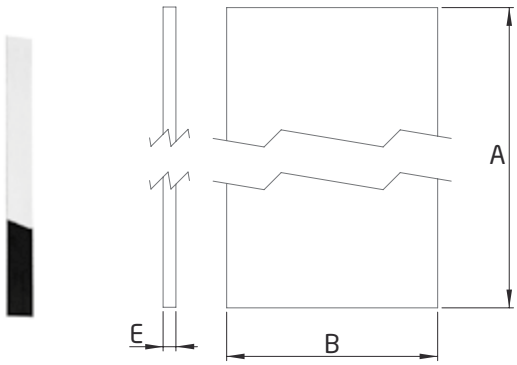

EC-201-1 AISI-316

BA

	A	B	E
1	580	25	1.5

Side platen for post MT-201, left or right mounting

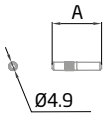

PM-01 AISI-316

	A
10	30

Connection pin

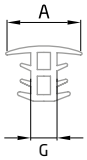

PL-06

	LG	A	G
1	1000	29	16.38-21.52

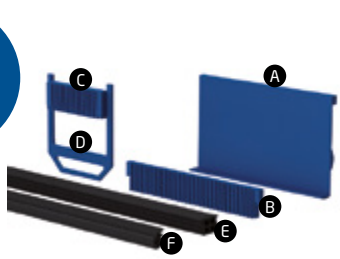

PL-14

	A/Pcs	B/Pcs	C/Pcs	D/Pcs	E (LG)	F (LG)	G
1	10	10	9	9	2500	2500	16.76
1	10	10	9	9	2500	2500	17.52
1	10	10	9	9	2500	2500	20.38
1	10	10	9	9	2500	2500	20.76
1	10	10	9	9	2500	2500	21.52

Gasket and wedges kit for Level-In glass

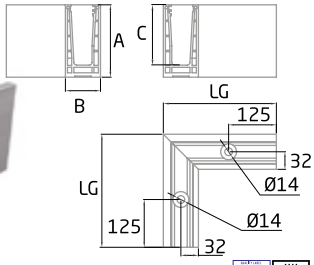

SV-1401-C OUTSIDE

	LG	A	B	C
1	240	132	64	110

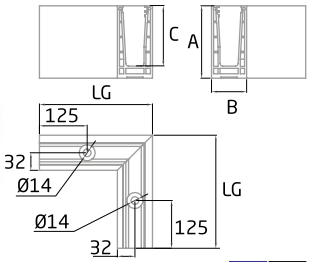

SV-1401-C INSIDE

	LG	A	B	C
1	240	132	64	110

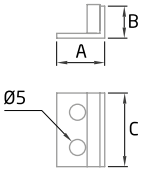

MD-01

	A	B	C	E
2	15	10	23	1.5

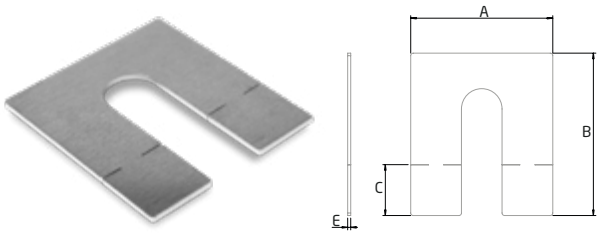

GP-1401 E1

	A	B	C	E
10	56	64	20	1.2

Levelling shim for profiles

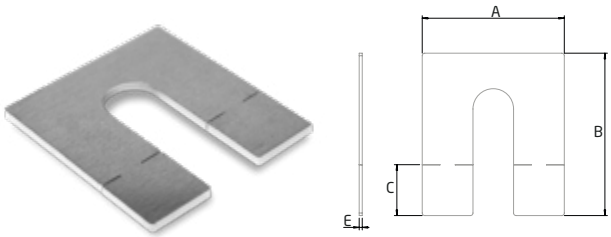

GP-1401 E2

	A	B	C	E
10	56	64	20	2

Levelling shim for profiles

PM-10

	A	B	E
1	132	64	2

*Included

QLTY: Aluminium

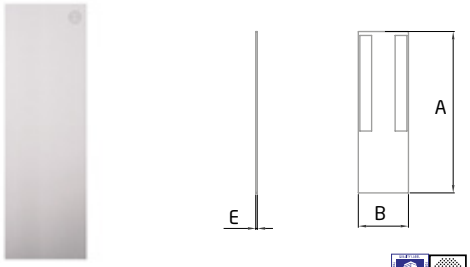

PM-11

	A	B	E
1	206	64	2

*Included

QLTY: Aluminium

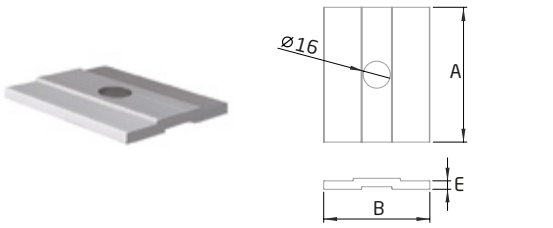

PM-02

	A	B	E
10	80	63	5

Drainage profile for glass railing system GlassFit SV-1401

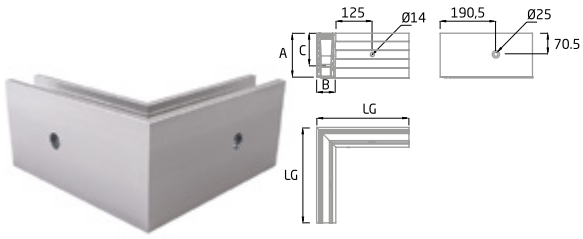

SV-1402-C OUTSIDE

	LG	A	B	C
1	315.5	147	65.5	110

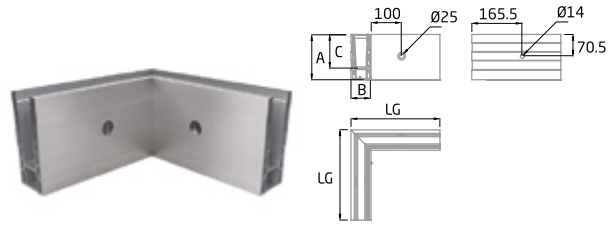

SV-1402-C INSIDE

	LG	A	B	C
1	290.5	147	65.5	110

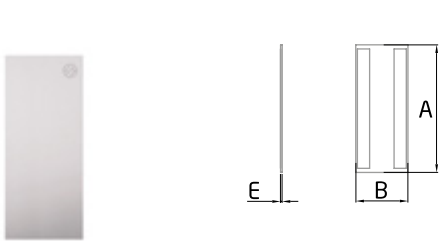

PM-12

	A	B	E
1	151	67.5	2

SV-1402 with PM-55 (For straight sections)

*Included

QLTY: Aluminium

PM-13

	A	B	E
1	239	67.5	2

SV-1402 with PM-55 (For angled sections)

*Included

QLTY: Aluminium

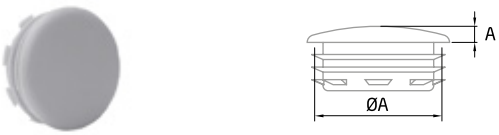

TF-580 LDPE

	øA	A
10	25	3
10	31	3

UV filter

QLTY: LDPE

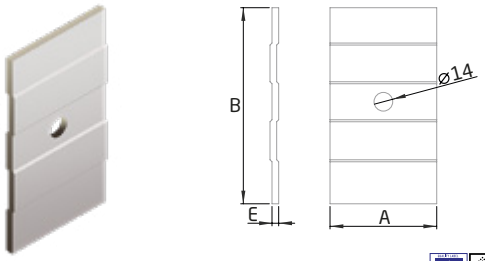

DP-1402-1

	A	B	E
10	80	147	5

Drainage profile for glass railing system GlassFit SV-1402

PM-55

	LG	A	B	C	E
2	2500	152	66	15	1.5

QLTY: Aluminium

PM-56

	LG	A	B	C	E
2	2500	152	67	16	1.5

*Not included

QLTY: AISI 316

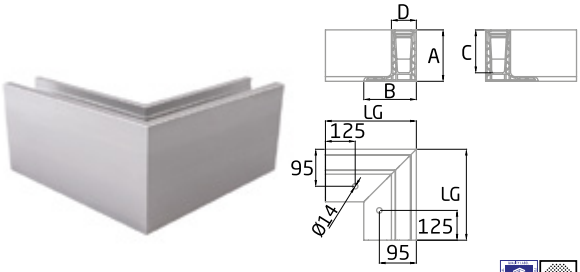

SV-1403-C OUTSIDE

	LG	A	B	C	D
1	290	132	135	110	64

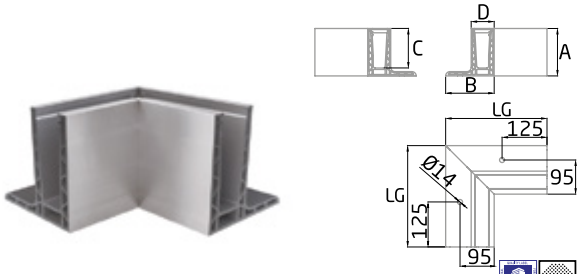

SV-1403-C INSIDE

	LG	A	B	C	D
1	240	132	135	110	64

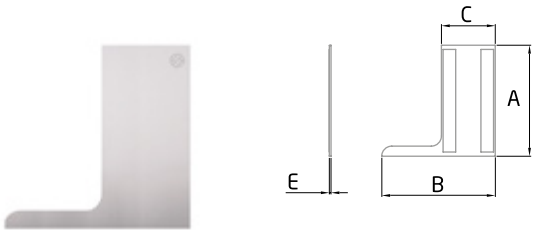

PM-16

	A	B	C	E
1	132	135	64	2

*Included

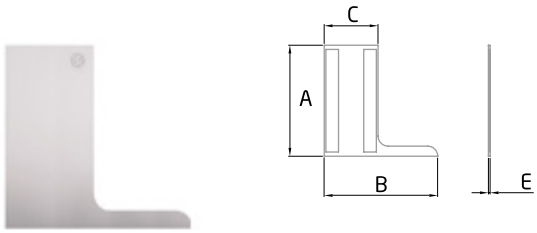

PM-17

	A	B	C	E
1	132	135	64	2

*Included

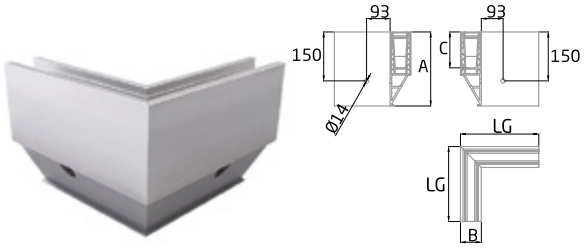

SV-1404-C OUTSIDE

	LG	A	B	C
1	314	227	64	110

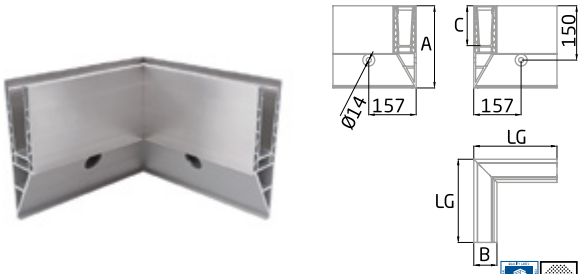

SV-1404-C INSIDE

	LG	A	B	C
1	289	227	64	110

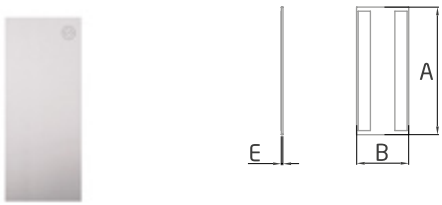

PM-14

	A	B	E
1	230	64	2

SV-1404 with PM-57 (For straight sections)

*Included

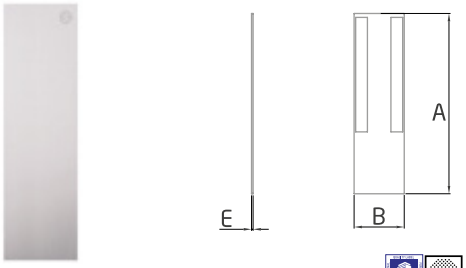

PM-15

	A	B	E
1	358	64	2

SV-1404 with PM-57 (For angled sections)

*Included

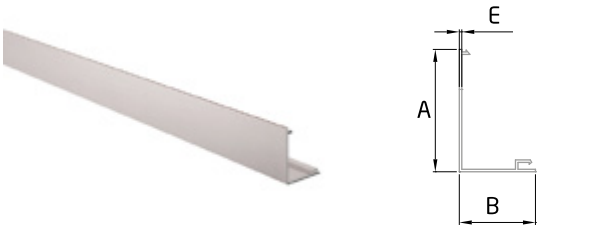

PM-57

	LG	A	B	E
2	2500	98	61	1.5

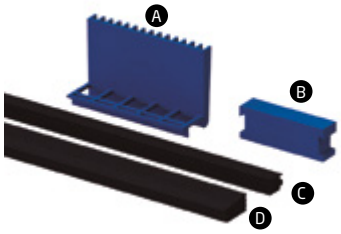

PL-150 KIT

	A/Pcs	B/Pcs	C (LG)	D (LG)	G
1	10	10	2500	2500	12.38-12.76
1	13	13	2500	2500	16.38-16.76

Glazing kit

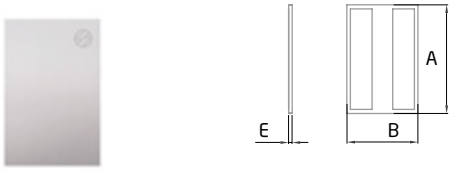

EC-1501-1

	A	B	E
1	85	55	2

Horizontal end cap

*Included

QLTY: Aluminium

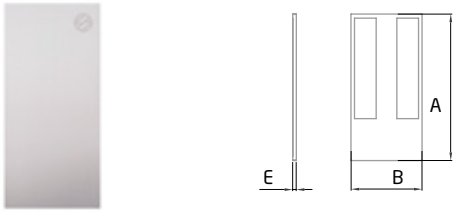

EC-1501-2

	A	B	E
1	122	55	2

Staircase end cap

*Included

QLTY: Aluminium

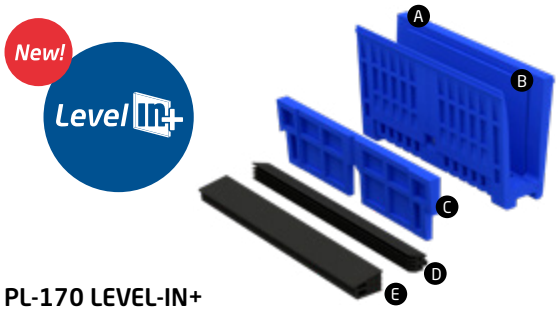

PL-170 LEVEL-IN+

	A/Pcs	B/Pcs	C (LG)	D (LG)	E (LG)	G
1	10	10	10	2500	2500	16.38-16.76
1	10	10	10	2500	2500	17.52
1	10	10	10	2500	2500	20.38-20.76
1	10	10	10	2500	2500	21.52

Glazing kit Level-In+

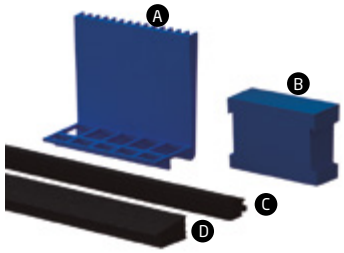

PL-170 KIT

	A/Pcs	B/Pcs	C (LG)	D (LG)	G
1	13	13	2500	2500	12.38-12.76
1	13	13	2500	2500	16.38-16.76*
1	13	13	2500	2500	17.52*
1	13	13	2500	2500	20.38-20.76*
1	13	13	2500	2500	21.52*

Glazing kit

*25m packaging available

PL-170 KIT-S

	A/Pcs	B/Pcs	C (LG)	D (LG)	G
1	15	15	2500	2500	16.38-16.76
1	18	18	2500	2500	20.38-20.76

Special glazing kit

PL-170 IC KIT

	A/Pcs	B/Pcs	C (LG)	D (LG)	G
1	13	13	2500	2500	21.52
1	13	13	2500	2500	16.38-16.76

Glazing kit for inverted mounting

PL-170 IC KIT-S

	A/Pcs	B/Pcs	C (LG)	D (LG)	G
1	18	18	2500	2500	20.38-20.76

Special glazing kit for inverted mounting

PL-170 PT KIT

	A/Pcs	B/Pcs	C (LG)	D (LG)	G
1	13	13	2500	2500	16.38-16.76
1	13	13	2500	2500	20.38-20.76
1	13	13	2500	2500	21.52

Glazing kit for ventilated rainscreen

PL-170 PT KIT-S

	A/Pcs	B/Pcs	C (LG)	D (LG)	G
1	18	18	2500	2500	16.38-16.76
1	18	18	2500	2500	20.38-20.76

Special glazing kit for ventilated rainscreen

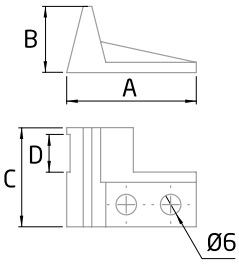

MD-02 L

	A	B	C	D
2	38	19	29	11

Compatibility with LED lighting

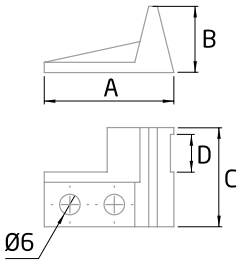

MD-02 R

	A	B	C	D
2	38	19	29	11

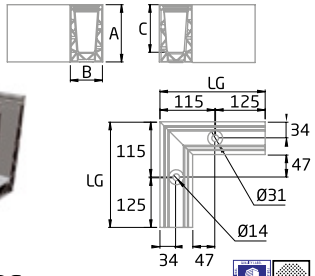

SV-1701-C INSIDE / OUTSIDE

	LG	A	B	C
1	240	120	68	100

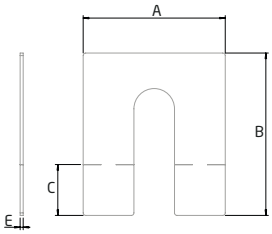

GP-1701 E1

	A	B	C	E
10	56	64	20	1.2

Levelling shim for profiles

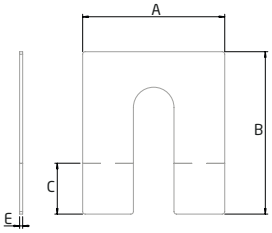

GP-1701 E2

	A	B	C	E
10	56	64	20	2

Levelling shim for profiles

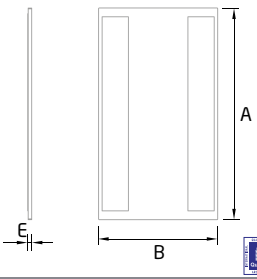

EC-1701-1

	A	B	E
1	120	68	2

Horizontal end cap

*Included

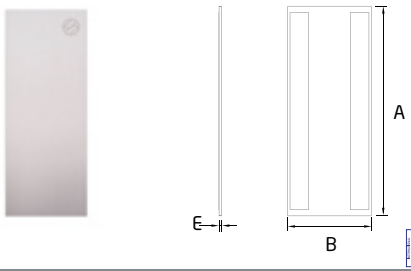

EC-1701-2

	A	B	E
1	170	68	2

Staircase end cap

*Included

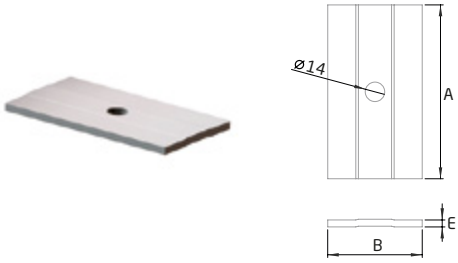

DP-1701-1

	A	B	E
10	125	68	5

Drainage profile for glass railing system GlassFit SV-1701

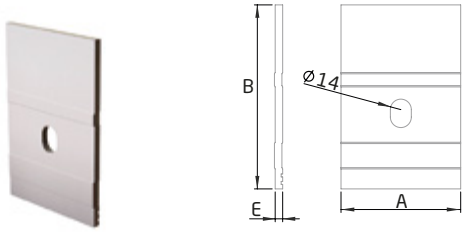

DP-01

	A	B	E
10	80	123	5

Drainage profile for glass railing system GlassFit SV-1602/ SV-1702

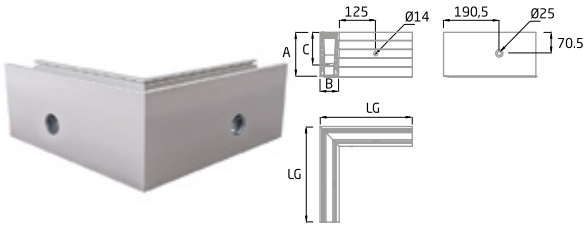

SV-1602-C OUTSIDE

	LG	A	B	C
1	314.5	120	64.5	100

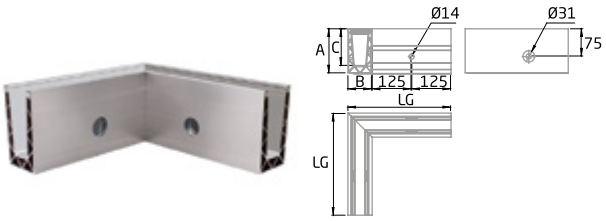

SV-1602-C INSIDE

	LG	A	B	C
1	289.5	120	64.5	100

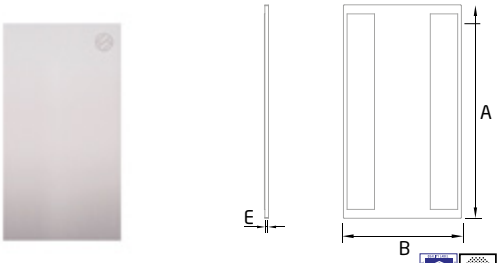

EC-1602-1

	A	B	E
1	120	68.5	2

Horizontal end cap with no cladding

*Included

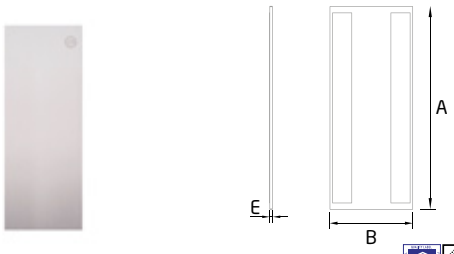

EC-1602-2

	A	B	E
1	170	68.5	2

Staircase end cap with no cladding

*Included

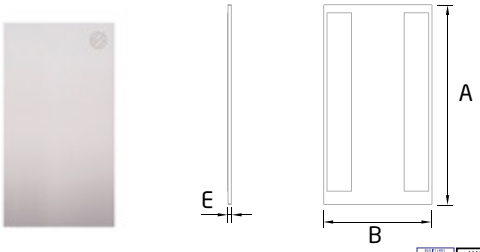

EC-1602-3

	A	B	E
1	123.2	70.2	2

Horizontal end cap with cladding

*Included

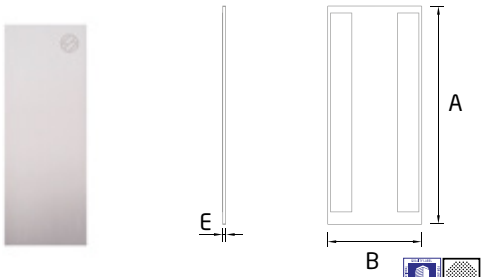

EC-1602-4

	A	B	E
1	174	70.2	2

Staircase end cap with cladding

*Included

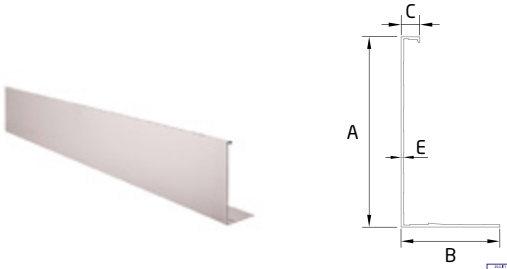

CL-1602-1

	LG	A	B	C	E
2	2500	125	63.7	12	1.7

Cladding for GlassFit SV-1602 glass railing system

*Included

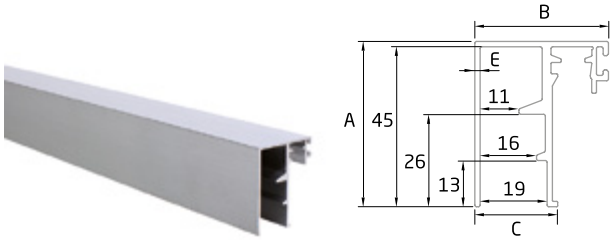

TC-01

	LG	A	B	C	E
2	2500	46.5	38	23.5	1.5

Profile trim

QLTY: Aluminium

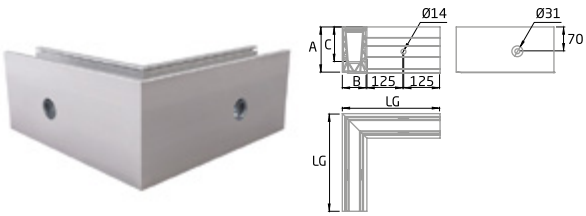

SV-1702-C OUTSIDE

	LG	A	B	C
1	319.5	130	69.5	100

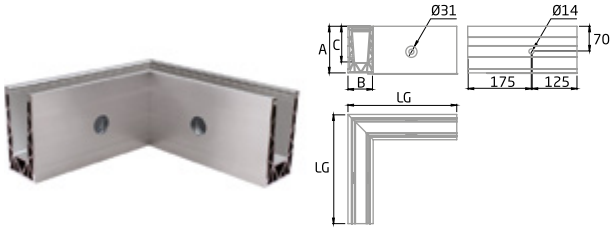

SV-1702-C INSIDE

	LG	A	B	C
1	300	130	69.5	100

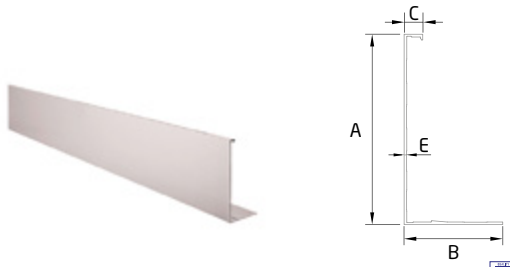

CL-1702-1

	LG	A	B	C	E
2	2500	135	67.7	12	1.7

Cladding for GlassFit SV-1702 glass railing system

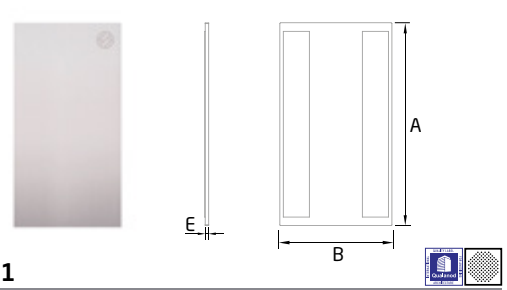

EC-1702-1

	A	B	E
1	130	68.5	2

Horizontal end cap with no cladding

*Included

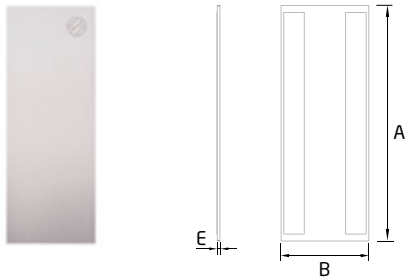

EC-1702-2

	A	B	E
1	185	68.5	2

Staircase end cap with no cladding

*Included

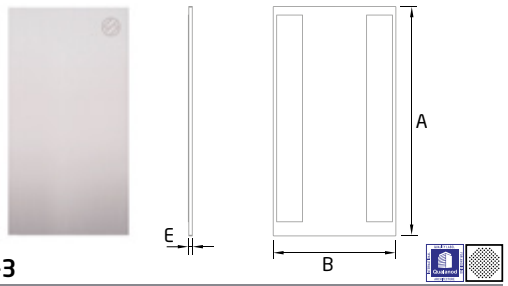

EC-1702-3

	A	B	E
1	133.2	71.2	2

Horizontal end cap with cladding

*Included

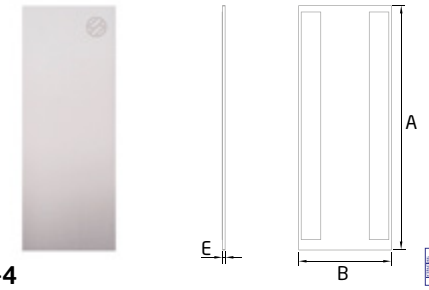

EC-1702-4

	A	B	E
1	188	71.2	2

Staircase end cap with cladding

*Included

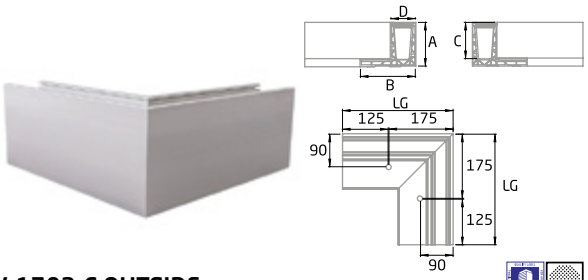

SV-1703-C OUTSIDE

	LG	A	B	C	D
1	300	120	150	100	68

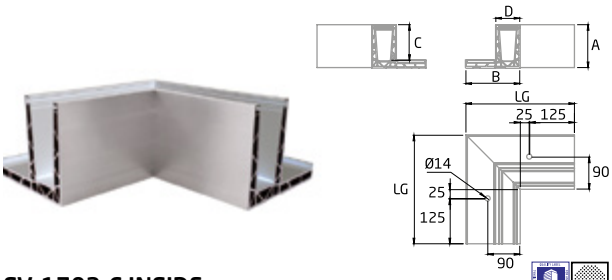

SV-1703-C INSIDE

	LG	A	B	C	D
1	300	120	68	100	68

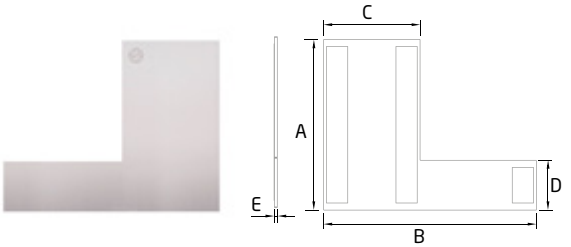

EC-1703-1

	A	B	C	D	E
1	120	150	68	35	2

Horizontal right end cap

*Included

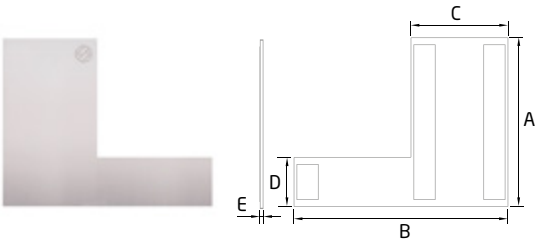

EC-1703-3

	A	B	C	D	E
1	120	150	68	35	2

Horizontal left end cap

*Included

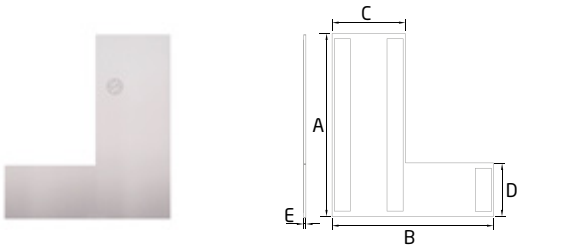

EC-1703-2

	A	B	C	D	E
1	170	150	68	49.8	2

Staircase right end cap

*Included

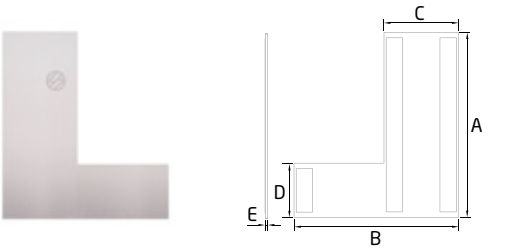

EC-1703-4

	A	B	C	D	E
1	170	150	68	49.8	2

Staircase left end cap

*Included

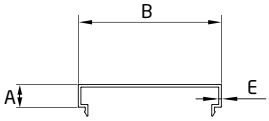

CL-1703-1

	LG	A	B	E
2	2500	13	82	1.5

Cladding for GlassFit SV-1703 and 1803 glass railing system

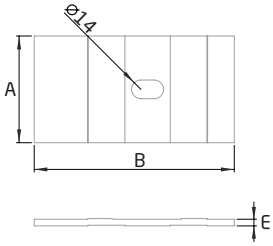

DP-03

	A	B	E
10	80	150	5

Drainage profile for glass railing system GlassFit SV-1703

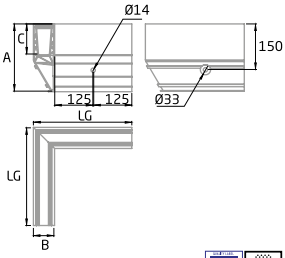

SV-1704-C OUTSIDE

	LG	A	B	C
1	318.5	220	68.5	100

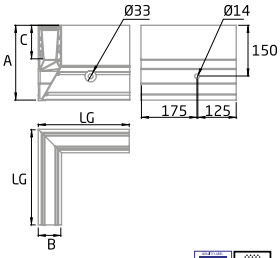

SV-1704-C INSIDE

	LG	A	B	C
1	300	220	68.5	100

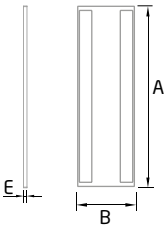

EC-1704-1

	A	B	E
1	220	68.5	2

Horizontal end cap with cladding

*Included

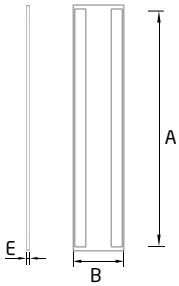

EC-1704-2

	A	B	E
1	315	68.5	2

Staircase end cap with cladding

*Included

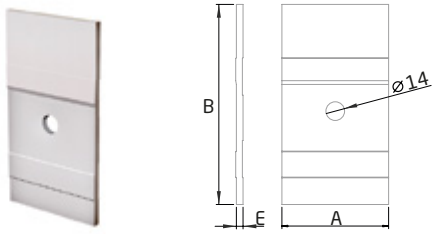

DP-1704-1

	A	B	E
10	80	150	5

Drainage profile for glass railing system GlassFit SV-1704

CL-1704-2

	LG	A	B	E
2	2500	135	67.7	1.7

Cladding for GlassFit SV-1704 glass railing system

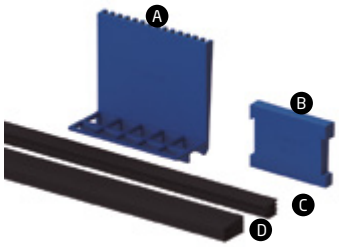

PL-180 KIT

	A/Pcs	B/Pcs	C (LG)	D (LG)	G
1	15	15	2500	2500	21.52
1	15	15	2500	2500	25.52
1	15	15	2500	2500	30.38-30.76

Glazing kit

PL-07

	LG	A	G
1	1000	34	24.38-30.76

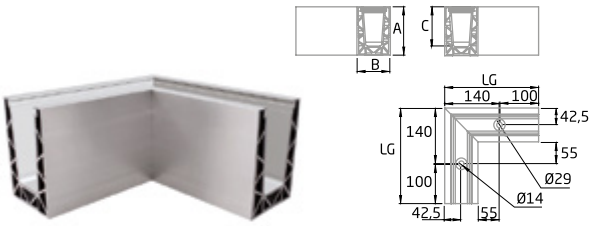

SV-1801-C INSIDE / OUTSIDE

	LG	A	B	C
1	240	123	85	100

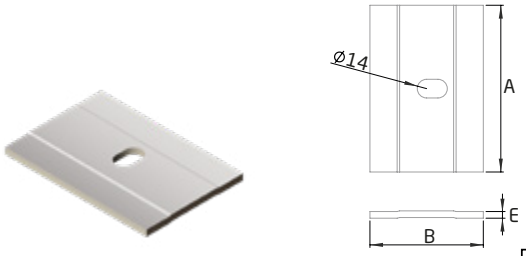

DP-02

	A	B	E
10	125	85	5

Drainage profile for glass railing system GlassFit SV-1801

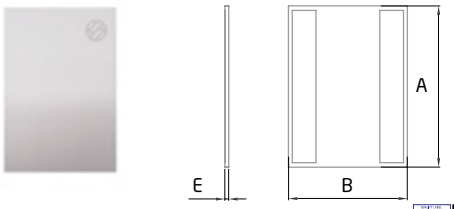

EC-1801-1

	A	B	E
1	123	85	2

Horizontal end cap

*Included

QLTY: Aluminium

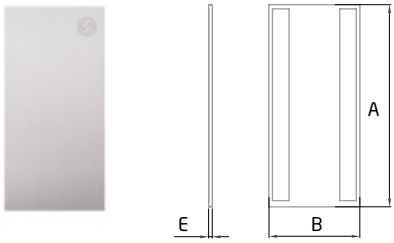

EC-1801-2

	A	B	E
1	175	85	2

Staircase end cap

*Included

QLTY: Aluminium

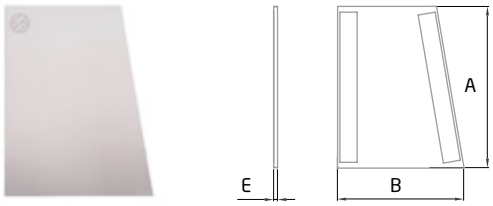

EC-1801 RX-1

	A	B	E
1	140	110	2

Horizontal right end cap

*Included

QLTY: Aluminium

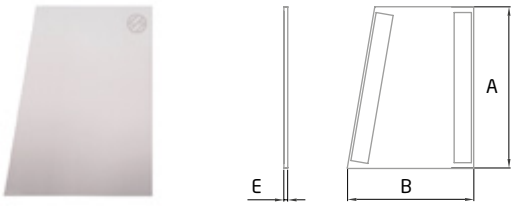

EC-1801 RX-3

	A	B	E
1	140	110	2

Horizontal left end cap

*Included

QLTY: Aluminium

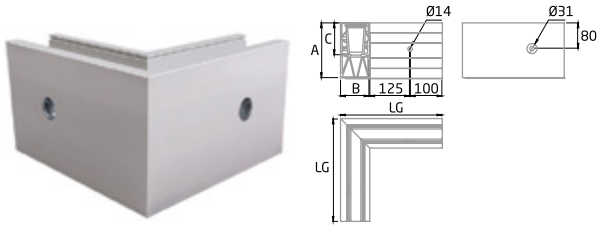

SV-1802-C OUTSIDE

	LG	A	B	C
1	315.5	170	90.5	100

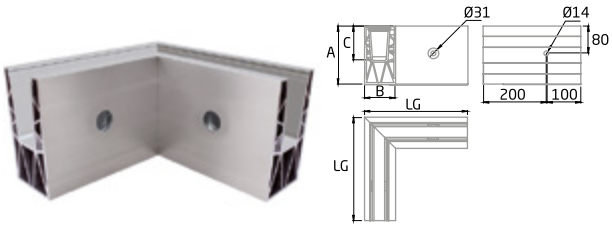

SV-1802-C INSIDE

	LG	A	B	C
1	300	170	90.5	100

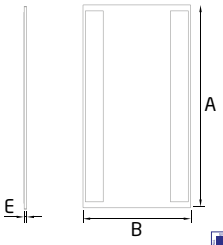

EC-1802-1

	A	B	E
1	170	90.5	2

Horizontal end cap with no cladding

*Included

QLTY: Aluminium

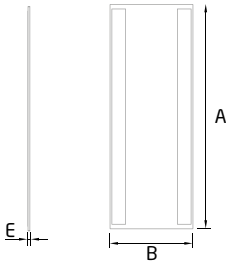

EC-1802-2

	A	B	E
1	245	90.5	2

Staircase end cap with no cladding

*Included

QLTY: Aluminium

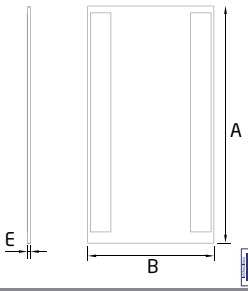

EC-1802-3

	A	B	E
1	173.2	92.2	2

Horizontal end cap with cladding

*Included

QLTY: Aluminium

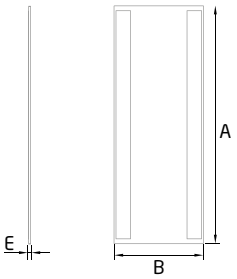

EC-1802-4

	A	B	E
1	245	92.2	2

Staircase end cap with cladding

*Included

QLTY: Aluminium

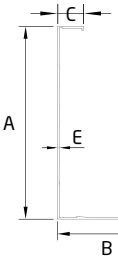

CL-1802-1

	LG	A	B	C	E
2	2500	175	89.7	23.5	1.7

Cladding for GlassFit SV-1802 glass railing system

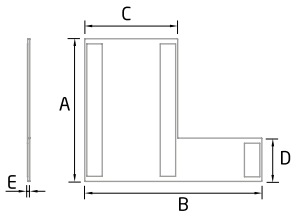

EC-1803-1

	A	B	C	D	E
1	140	172.5	90.5	42.5	2

Horizontal right end cap

*Included

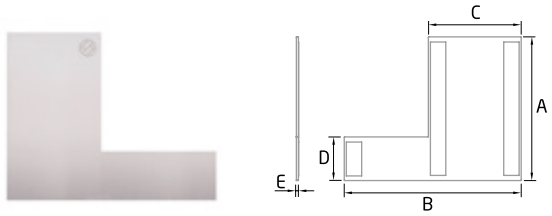

EC-1803-3

	A	B	C	D	E
1	140	172.5	90.5	42.5	2

Horizontal left end cap

*Included

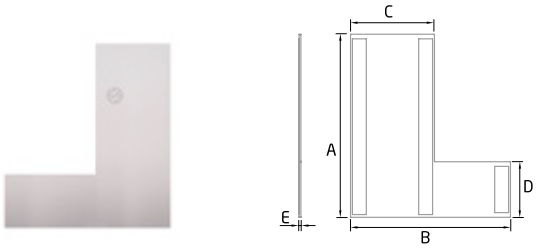

EC-1803-2

	A	B	C	D	E
1	198	172.5	90.5	60.1	2

Staircase right end cap

*Included

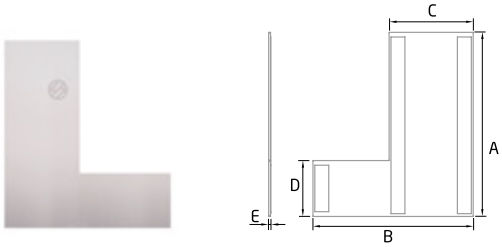

EC-1803-4

	A	B	C	D	E
1	198	172.5	90.5	60.1	2

Staircase left end cap

*Included

GlassFit Surface

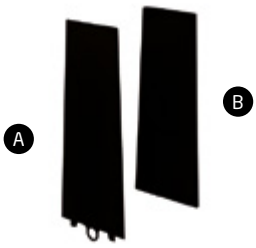

PL-80

A /	B /	G
1	1	16,38-16,76
1	1	17,52
1	1	20,38-20,76
1	1	21,52

Glazing kit for CC-800

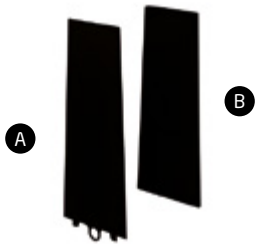

PL-80 Curved

A /	B /	G	Ra
1	1	16,38-16,76	1-4 m
1	1	17,52	1-4 m
1	1	20,38-20,76	1-4 m
1	1	21,52	1-4 m

Glazing kit for CC-800 with curved glass

Ra: Outer radius of the glass

The PL-80 Curved Kit is compatible with glass panels with a minimum outer radius of 1 m and a maximum outer radius of 4 m. The standard kit PL-80 can be used for glass panels with a radius of curvature greater than 4 m.

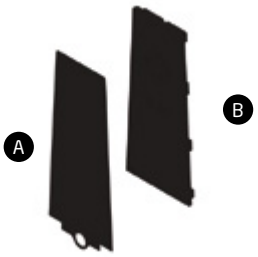

PL-81

A /	B /	G
1	1	12,38-12,76
1	1	16,38-16,76
1	1	17,52

Glazing kit for CC-801

New!

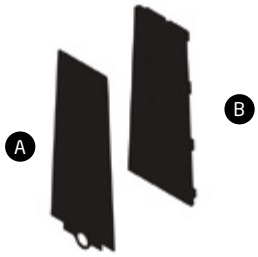

PL-81 Curved

A /	B /	G	Ra
1	1	12,38-12,76	1-4 m
1	1	16,38-16,76	1-4 m
1	1	17,52	1-4 m

Glazing kit for CC-801 with curved glass

Ra: Outer radius of the glass

The PL-81 Curved Kit is compatible with glass panels with a minimum outer radius of 1 m and a maximum outer radius of 4 m. The standard kit PL-81 can be used for glass panels with a radius of curvature greater than 4 m.

PL-70

A /	B /	G
1	1	12,38-12,76
1	1	16,38-16,76
1	1	17,52

Glazing kit for CC-780

New!

PL-70 Curved

A /	B /	G	Ra
1	1	12,38-12,76	1-4 m
1	1	16,38-16,76	1-4 m
1	1	17,52	1-4 m

Glazing kit for CC-780 with curved glass

Ra: Outer radius of the glass

The PL-70 Curved Kit is compatible with glass panels with a minimum outer radius of 1 m and a maximum outer radius of 4 m. The standard kit PL-70 can be used for glass panels with a radius of curvature greater than 4 m.

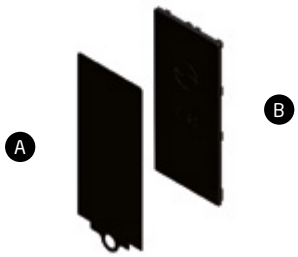

PL-72

A /	B /	G
1	1	12,38-12,76
1	1	16,38-16,76
1	1	17,52

Glazing kit for CC-782

New!

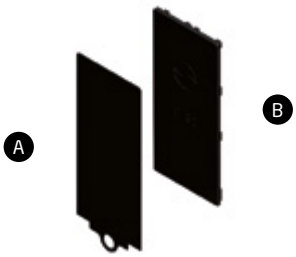

PL-72 Curved

A /	B /	G	Ra
1	1	12,38-12,76	1-4 m
1	1	16,38-16,76	1-4 m
1	1	17,52	1-4 m

Glazing kit for CC-782 with curved glass

Ra: Outer radius of the glass

The PL-72 Curved Kit is compatible with glass panels with a minimum outer radius of 1 m and a maximum outer radius of 4 m. The standard kit PL-72 can be used for glass panels with a radius of curvature greater than 4 m.

New!

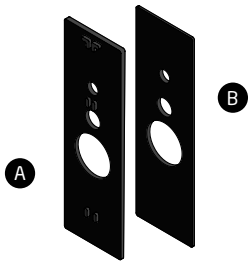

PL-71

A /	B /	G
1	1	17,52
1	1	20,38-20,76
1	1	21,52

Glazing kit for CC-791

New!

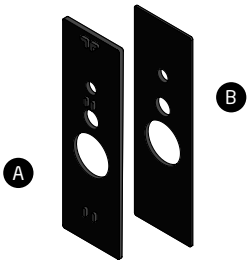

PL-71 Curved

A /	B /	G	Ra
1	1	17,52	1-4 m
1	1	20,38-20,76	1-4 m
1	1	21,52	1-4 m

Glazing kit for CC-791 with curved glass

Ra: Outer radius of the glass

The PL-71 Curved Kit is compatible with glass panels with a minimum outer radius of 1 m and a maximum outer radius of 4 m. The standard kit PL-71 can be used for glass panels with a radius of curvature greater than 4 m.

New!

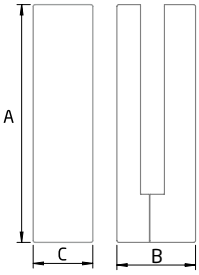

CL-791-1 AISI-316

	A	B	C
1	254	84	64

Material	Finish		
AISI-316	BA	SATIN	SATIN BLACK FINISH

Handrails

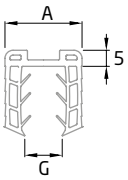

PL-03

LG	A	G
5000	24	8-11.52
5000	24	12-13.52
5000	24	16.38-17.52
5000	24	20.38-21.52

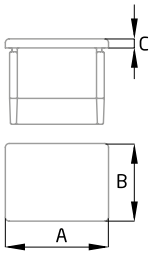

TF-514 AISI-316

BA SATIN

	A	B	C	E*
2	40	30	4	1.5

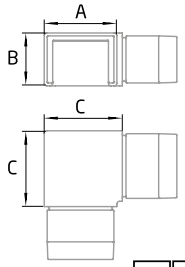

CT-240 AISI-316

BA SATIN

	A	B	C	E*
2	40	30	43	1.5

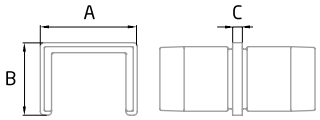

CT-241 AISI-316

BA SATIN

	A	B	C	E*
2	40	30	4	1.5

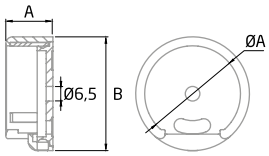

AV-605 AISI-316

BA SATIN

	øA	A	B
2	42.4	21	51

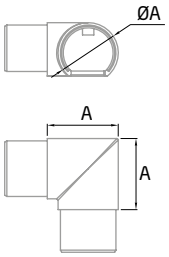

CT-211 AISI-316

BA SATIN

	øA	A	E*
2	42.4	50	1.5

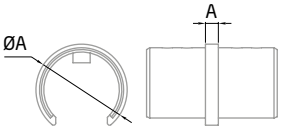

CT-212 AISI-316

BA SATIN

	øA	A	E*
2	42.4	4	1.5

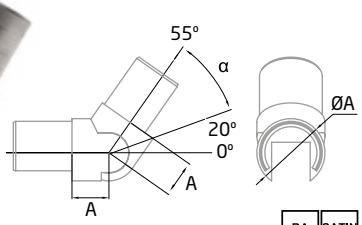

SA-416 AISI-316

BA SATIN

	øA	A	E*	α
2	42.4	23	1.5	20-55°

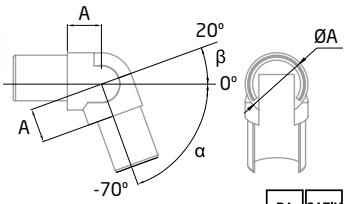

SA-417 AISI-316

BA SATIN

	øA	A	E*	α	β
2	42.4	23	1.5	0-70°	0-20°

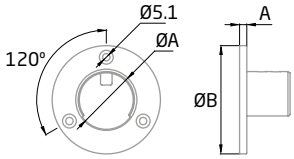

AV-609 AISI-316

BA SATIN

	øA	øB	A	E*
2	42.4	75	5	1.5

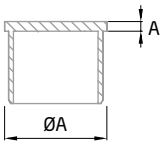

TF-512 AISI-316

BA SATIN

	øA	A	E*
2	42.4	3	1.5

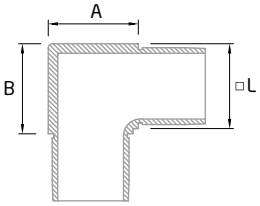

CT-220 AISI-316

BA SATIN

	□L	A	B	E*
2	40x40	43	43	1.5

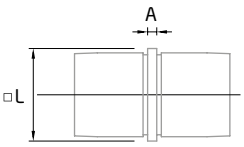

CT-221 AISI-316

BA SATIN

	□L	A	E*
2	40x40	4	1.5

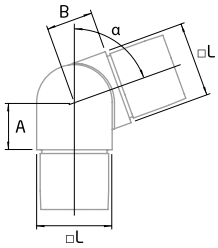

SA-433 AISI-316

BA SATIN

	□L	A	B	α	E*
2	40x40	25	25	-30°/70°	1.5

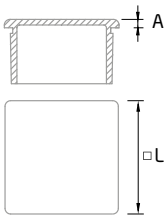

TF-530 AISI-316

BA SATIN

	□L	A	E*
2	40x40	3	1.5

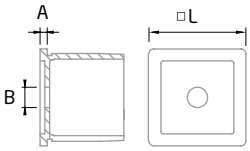

ST-333 AISI-316

BA SATIN

	□L	A	B	E*
2	40x40	3	8.5	1.5

BR-2087

DIN-7981 Ø 6.3 L-60

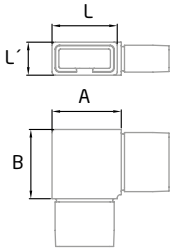

CT-230 AISI-316

BA SATIN

	L	L´	A	B	E*
2	40	20	43	43	1.5

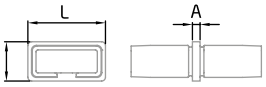

CT-258 AISI-316

BA SATIN

	L	L´	A	E*
2	40	20	4	1.5

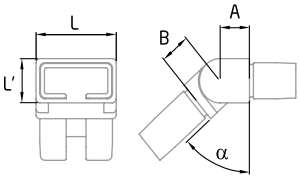

SA-432 AISI-316

BA SATIN

	L	L´	A	B	α	E*
2	40	20	15	15	0-90°	1.5

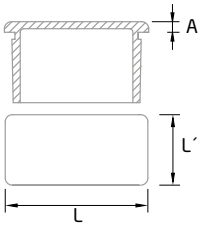

TF-535 AISI-316

BA SATIN

	L	L´	A	E*
2	40	20	3	1.5

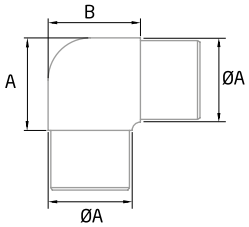

CT-200 AISI-316 BA SATIN

	øA	A	B	E*
2	43	57	57	1.5
2	50.8	56	56	1.5

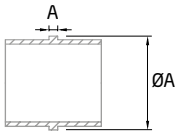

CT-207 AISI-316 BA SATIN

	øA	A	E*
2	43	4	1.5
2	50.8	4	1.5

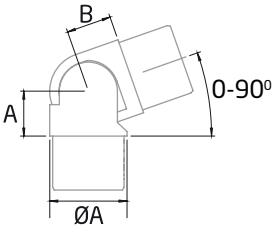

SA-409 AISI-316 BA SATIN

	øA	A	B	E*
4	12	8	8	1
4	20	13	12.5	1.5
2	43	25	25	1.5
2	50.8	32	32	1.5

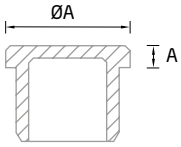

TF-502 AISI-316 BA SATIN

	øA	A	E*
2	43	2	1.5
2	50.8	2	1.5

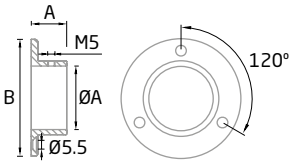

AV-601 AISI-316 BA SATIN

	øA	A	B
2	43	25	80
2	50.8	31	102

BR-2087 Ø4.5-6.0

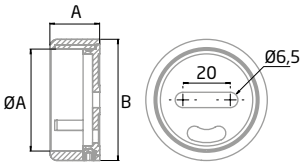

AV-606 AISI-316 BA SATIN

	øA	A	B
2	43	21	51.3

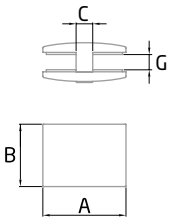

CC-736 AISI-316

	A	B	C	G
2	60	45	12	8-13.52
2	60	45	12	16.38-21.52

Material	Finish		
AISI-316	BA	SATIN	SATIN BLACK FINISH

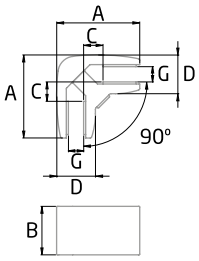

CC-737 AISI-316

	A	B	C	D	G
2	60	35	14	28	8-13.52
2	68	35	14	36	16.38-21.52

Material	Finish		
AISI-316	BA	SATIN	SATIN BLACK FINISH

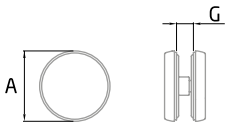

CC-735 AISI-316 BA SATIN

	A	G
2	50	8-13.52
2	50	15-21.52

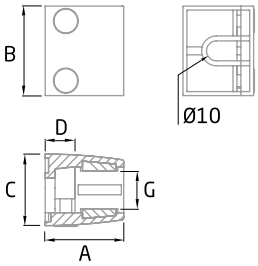

CC-738 AISI-316

	A	B	C	D	G
2	40	45	36	15	16.38-21.52

Material	Finish		
AISI-316	BA	SATIN	SATIN BLACK FINISH

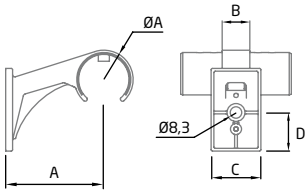

ST-345 AISI-316 BA SATIN

	ØA	A	B	C	D
2	42.4	71	20	36	28

BR-2012

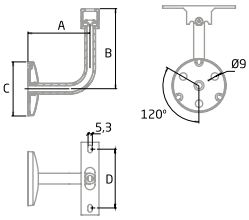

ST-346 AISI-316 BA SATIN

	A	B	C	D
2	75	97	66	72

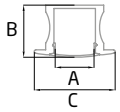

AL-01 SATIN

LG	A	B	C
2000	12	16	24

QLTY: Aluminium

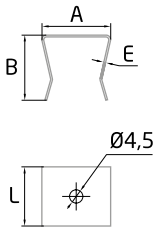

AL-00 AISI-304

	A	B	L	E*
10	23.2	22	20	0.6

DIN-912 M-4 L-6

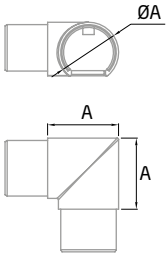

CT-211 AISI-316 BA SATIN

	øA	A	E*
2	42.4	50	1.5

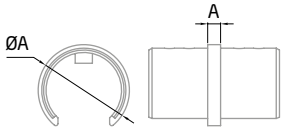

CT-212 AISI-316 BA SATIN

	øA	A	E*
2	42.4	4	1.5

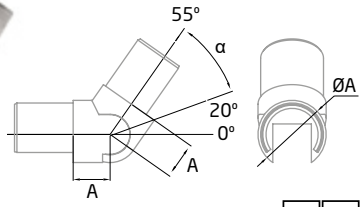

SA-416 AISI-316 BA SATIN

	øA	A	E*	α
2	42.4	23	1.5	20-55°

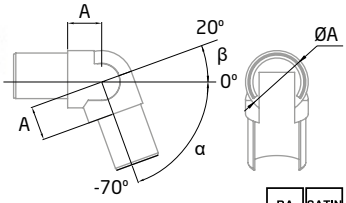

SA-417 AISI-316 BA SATIN

	øA	A	E*	α	β
2	42.4	23	1.5	0-70°	0-20°

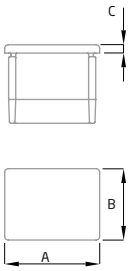

TF-514 AISI-316

BA SATIN

	A	B	C	E*
2	40	30	4	1.5

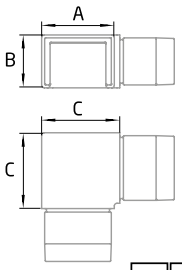

CT-240 AISI-316

BA SATIN

	A	B	C	E*
2	40	30	43	1.5

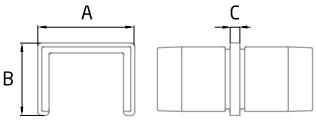

CT-241 AISI-316

BA SATIN

	A	B	C	E*
2	40	30	4	1.5

LED KIT

LED STRIP 24V - 3000K

	m/box	V	W/m	Lm/m	Protection
1	5	24	12	1150	IP-65

LED. Colour: Yellow light

LED STRIP 24V - 4000K

	m/box	V	W/m	Lm/m	Protection
1	5	24	12	1150	IP-65

LED. Colour: White light

LED STRIP 230V - 3000K

	m/box	V	W/m	Lm/m	Protection
1	30	230	18	1850	IP-65

LED. Colour: Yellow light

LED STRIP 230V - 4000K

	m/box	V	W/m	Lm/m	Protection
1	30	230	18	1875	IP-65

LED. Colour: White light

LED COB STRIP 230V - 3000K

	m/box	V	W/m	Lm/m	Protection
1	30	230	15	1080	IP-65

LED. Colour: Yellow light

LED COB STRIP 230V - 4000K

	m/box	V	W/m	Lm/m	Protection
1	30	230	15	1230	IP-65

LED. Colour: White light

START LED STRIP 24V CONNECTOR

	V	Protection
1	24	IP-65

Start LED 24V connector

MIDDLE LED STRIP 24V CONNECTOR

	V	Protection
1	24	IP-65

Middle LED 24V connector

START LED STRIP 230V CONNECTOR

	V	Protection
1	230	IP-65

Start LED strip 230V connector

MIDDLE LED STRIP 230V CONNECTOR

	V	Protection
1	230	IP-65

Middle LED strip 230V connector

START LED COB STRIP 230V CONNECTOR

	V	Protection
1	230	IP-65

Start COB LED strip 230V connector

MIDDLE LED COB STRIP 230V CONNECTOR

	V	Protection
1	230	IP-65

Middle COB LED strip 230V connector

LED POWER DRIVER

	V (in)	V (out)	W	Protection
1	230	24	200	IP-67

Power supply for LED strips

Wiring diagram

Flex-Height

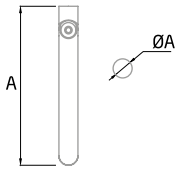

BG-00 AISI-316

BA SATIN

	øA	A
2	12	100

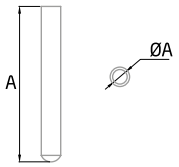

BF-00 AISI-316

BA SATIN

	øA	A
2	12	96

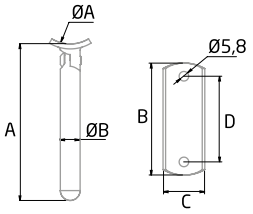

BG-R AISI-316 BA SATIN

	øA	øB	A	B	C	D
2	43	12	95	68	25	52
2	50.8	12	95	68	25	52

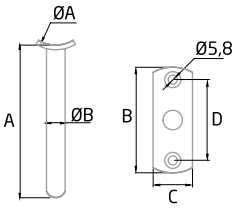

BF-R AISI-316 BA SATIN

	øA	øB	A	B	C	D
2	43	12	98	68	25	52
2	50.8	12	98	68	25	52

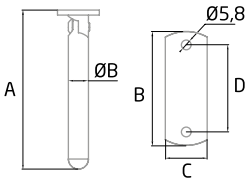

BG-FLAT AISI-316 BA SATIN

	øB	A	B	C	D
2	12	95	68	25	52

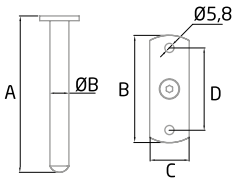

BF-FLAT AISI-316 BA SATIN

	øB	A	B	C	D
2	12	99	68	25	52

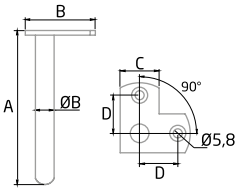

BF-C FLAT 90 AISI-316 BA SATIN

	øB	A	B	C	D
2	12	99	45	25	24.5

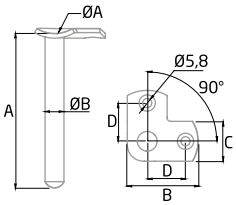

BF-C R 90 AISI-316 BA SATIN

	øA	øB	A	B	C	D
2	43	12	98	45	25	24
2	50.8	12	98	45	25.5	24

Stand-Rail

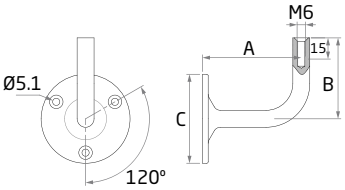

ST-303 W AISI-316 BA SATIN

	A	B	C
2	70	57.3	63

BR-2087 *(DIY Page 253)*

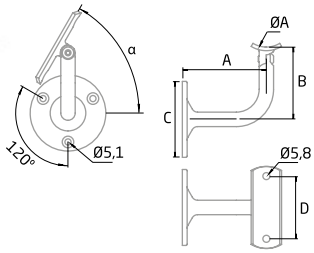

ST-303 A AISI-316 BA SATIN

	øA	A	B	C	D	α
2	43	70	60	63	52	-60°/+60°
2	50.8	70	60	63	52	-60°/+60°

BR-2087 *(DIY Page 253)*

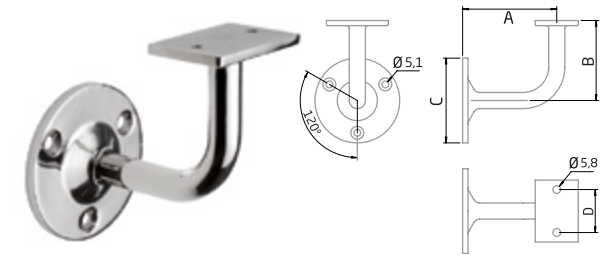

ST-303 FLAT AISI-316

BA SATIN

	A	B	C	D
2	70	59.5	63	32

BR-2087 *(DIY Page 253)*

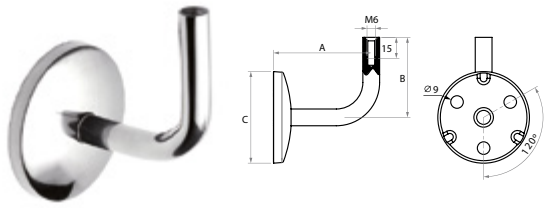

ST-353 W AISI-316

BA SATIN

	A	B	C
2	69	57.3	66

BR-2012 *(DIY Page 253)*
BR-2087 *(DIY Page 253)*

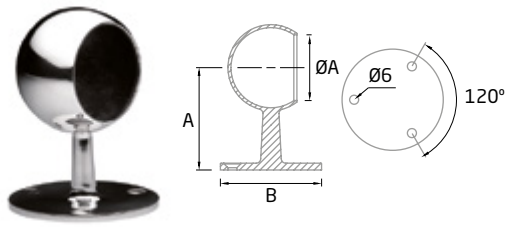

ST-304 END AISI-316

BA SATIN

	øA	A	B
2	43	68	67

BR-2087 *(DIY Page 253)*

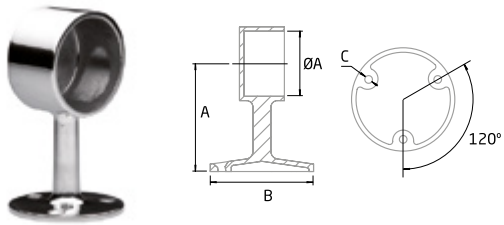

ST-306 END AISI-316

BA SATIN

	øA	A	B	C
2	43	72	69	5.1
2	50.8	84	63	5.8

BR-2087 *(DIY Page 253)*

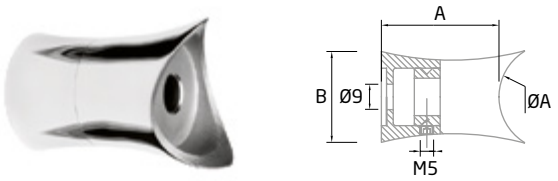

ST-313 AISI-316

BA SATIN

	øA	A	B
2	40	44	34

DIN-912 M-8 L-20 *(DIY Page 248)*
BR-2011 M-8 *(DIY Page 248)*

Adhesives and Sealants

FAST FIX GLUE (A-B 100ML)

1 kit

Approximate duration

ø50.8	ø43	ø38.1	ø20	ø12
40	50	60	120	150

FAST FIX GLUE characteristics
- Two-component cartridge (A+B).
- Handling time: 1 - 3 minutes.
- Functional strength: 30- 60 minutes.
- Final strength: 24 hours.
- Clearance (mm): min. 0.05 - max. 0.50 (recommended 0.10 - 0.30).
- Store in the original container, tightly closed, at temperatures between 5°C and 25°C.

New!

LOXEAL 85-02 (10 ML)

1

Series	Ref.
RP	RP-1400

Características characteristics
- Handling time: 1-4 minutes.
- Functional strength: 1-3 hours.
- Final strength: 2-4 hours.
- Max. Ø thread / clearance: M36/0.20 mm.
- Store in a cool, dry place at a temperature below 25°C.

FIS MS PRO

BLACK

1

Series	Ref.
RP	RP-1400, RP-1410

Sealant-adhesive

RP-25 (12mm / 33m)

	E
1	0.6

Series	Ref.
SV	SV-1255, SV-1260

Double-sided tape

Cleaning and maintenance

CLEAN+ (500ml)

1

* Cleaner

STAIN ZERO (500ml)

1

* Rust remover

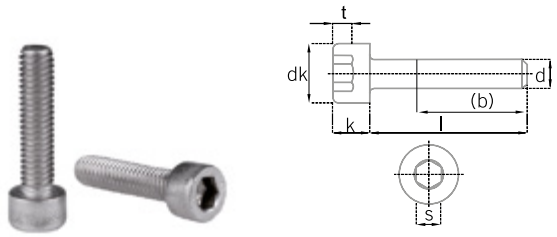

DIN-912

	Qlty.	d	LG	dK	Kmax	S
50	A2	M4	6	7	4	3
50	A2/A4	M8	20	13	8	6

M-4	Series	Ref.
	AL	AL-00

M-8	Series	Ref.
	ST	ST-313

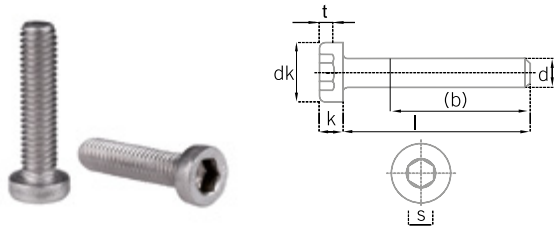

DIN-7984

	Qlty.	d	LG	dK	K	S	t
50	A2/A4	M-6	20	10	4	4	3

M-6	Series	Ref.
	ST	ST-334 FLAT

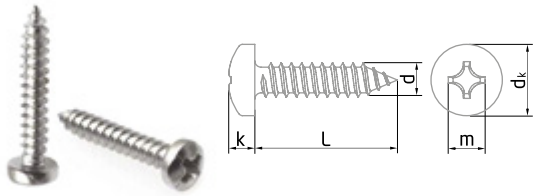

DIN-7981

	Qlty.	d	LG	dK	k	m
50	A2	4.8	25	9.5	3.55	5.1
50	A2	6.3	60	12.5	4.5	7.1

4.8*	Series	Ref.
	ST	ST-314

6.3	Series	Ref.
	ST	ST-333

Use for wood handrail.

BR-2011

	Qlty.	M
50	A2/A4	M4
50	A4	M6
50	A2/A4	M8

Series	Ref.
AL	AL-00

Series	Ref.
ST	ST-303 ST-303 A ST-303 W, ST-313, ST-334 FLAT

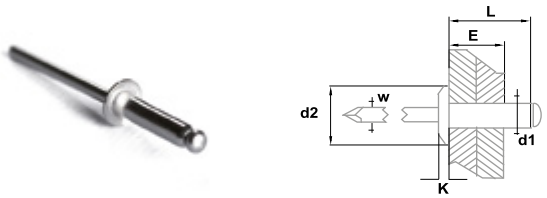

BR-2015

	Qlty.	M	LG
50	A2/A4	4.8	10

Series	Ref.
ST	ST-314, ST-315

BR-2016

10

Plastic mesh sleeves

FIS VS

1

Series	Ref.
CC	CC-772 , CC-775, CC-780, CC-782, CC-791, CC-800, CC-801
FB	FB-10
SV	SV-1401, SV-1402, SV-1403, SV-1404, SV-1501, SV-1602, SV-1701, SV-1702, SV-1703, SV-1801, SV-1802, SV-1803

FIS SE

10

DIN-975

	Qlty	M	LG	
1	CLASS 8.8/A2/A4	M-8	1000	ø10
1	CLASS 8.8/A2/A4	M-10	1000	ø12
1	CLASS 8.8/A2/A4	M-12	1000	ø14
1	CLASS 8.8/A2/A4	M-16	1000	ø18

M-8	Series	Ref.
	CC	CC-775 D30
	FB	FB-10

M-10	Series	Ref.
	CC	CC-772, CC-775 D50
	SV	SV-1401, SV-1402, SV-1403, SV-1404, SV-1501, SV-1701, SV-1702, SV-1602, SV-1703

M-12	Series	Ref.
	CC	CC-780, CC-782, CC-791, CC-800, CC-801
	SV	SV-1401, SV-1403, SV-1404, SV-1701, SV-1702, SV-1703, SV-1704, SV-1801, SV-1802, SV-1803

M-16	Series	Ref.
	SV	SV-1801 RX

DIN-934

	Qlty	M	E*
250	CLASS 8/A2/A4	M-8	6.5
250	CLASS 8/A2/A4	M-10	8
250	CLASS 8/A2/A4	M-12	10
100	CLASS 8/A2/A4	M-16	13

M-8	Series	Ref.
	CC	CC-775
	FB	FB-10

M-10	Series	Ref.
	CC	CC-772, CC-775
	SV	SV-1401, SV-1403, SV-1404, SV-1501, SV-1701, SV-1703

M-12	Series	Ref.
	CC	CC-780, CC-782, CC-791, CC-800, CC-801
	SV	SV-1401, SV-1403, SV-1404, SV-1701, SV-1702, SV-1703, SV-1704, SV-1801, SV-1802, SV-1803

M-16	Series	Ref.
	SV	SV-1801 RX

DIN-125

	Qlty	M	E*
250	STEEL /A2/A4	M-8	1.6
250	STEEL /A2/A4	M-10	2
250	STEEL /A2/A4	M-12	2.5
100	STEEL /A2/A4	M-16	3

M-8	Series	Ref.
	CC	CC-775 D30
	FB	FB-10

M-10	Series	Ref.
	CC	CC-772, CC-775 D50
	SV	SV-1401, SV-1402, SV-1403, SV-1404, SV-1501, SV-1701, SV-1702, SV-1602, SV-1703

M-12	Series	Ref.
	CC	CC-780, CC-782, CC-791, CC-800, CC-801
	SV	SV-1401, SV-1403, SV-1404, SV-1701, SV-1702, SV-1703, SV-1704, SV-1801, SV-1802, SV-1803

M-16	Series	Ref.
	SV	SV-1801 RX

DIN-439

	Qlty	M	*E
250	A2/A4	M-10	5

M-10	Series	Ref.
	SV	SV-1402, SV-1602, SV-1702

HUS4-H

	Qlty	M	LG	E*	
25	STEEL	M-8	75	15	ø8
50	STEEL	M-10	110	25	ø10

M-8	Series	Ref.
	FB	FB-10

M-10	Series	Ref.
	CC	CC-772, CC-791
	SV	SV-1401, SV-1501, SV-1602, SV-1701, SV-1702, SV-1802, SV-1803

HUS4-HR

	Qlty	M	LG	E*	
25	A4	M-8	75	15	ø8
25	A4	M-10	105	15	ø10

M-8	Series	Ref.
	FB	FB-10

M-10	Series	Ref.
	CC	CC-772, CC-791
	SV	SV-1401, SV-1501, SV-1602, SV-1701, SV-1702, SV-1802, SV-1803

HUS4-C

	Qlty	M	LG	E*	
50	STEEL	M-10	100	15	ø10

Series	Ref.
CC	CC-782

HUS4-CR

	Qlty	M	LG	E*	
50	A4	M-10	105	15	ø10

Series	Ref.
CC	CC-782

FH II-S

	Qlty	M	LG	E*	
50	STEEL/A4	M-8	105	25	ø12

Series	
SV	SV-1401
	SV-1402

FH II-SK

	Qlty	M	LG	E*	
25	STEEL	M-8	100	25	ø12
25	A4	M-8	105	30	ø12

Series	Ref.
CC	CC-782

FAZ II

	Qlty	M	LG	E*	
50	STEEL / A4	M-8	95	30	ø8
20	STEEL / A4	M-12	120	20	ø12

M-8	Series	Ref.
	FB	FB-10

M-12	Series	Ref.
	CC	CC-772, CC-775 D50
	SV	SV-1403, SV-1404, SV-1703, SV-1704

FBN II

	Qlty	M	LG	E*	
50	STEEL/A4	M-10	95	20	ø10
20	STEEL/A4	M-12	116	20	ø12

M-10	Series	Ref.
	CC	CC-772, CC-775 D50

M-12	Series	Ref.
	SV	SV-1403

CH

	Qlty	M	LG	E*	
50	STEEL/A2	M-8	80	15	ø10
50	STEEL/A2	M-10	100	25	ø12

CH-PL

	Qlty	M	LG	E*	
50	STEEL/A2	M-10	100	25	ø12

TH DEX

	Qlty	M	LG	E*	
50	STEEL	M-10	130	70	ø8

MT

	Qlty	M	LG	E*	
50	STEEL/A2/A4	M-10	150	10	ø10
50	STEEL/A2/A4	M-10	90	10	ø10
50	STEEL/A2/A4	M-12	110	12	ø12

BR-2012

	Qlty	LG	E*	
50	STEEL/A4	80	10	ø8

Series	Ref.
ST	ST-334 FLAT, ST-346, ST-353, ST-353 W, ST-354 , ST-358,

BR-2018

	Qlty	LG	E*	
50	STEEL/A4	80	10	ø8

Series	Ref.
AV	ST-333

BR-2087

	Qlty	øT	P	
100	NYLON	4.5-6.0	50	ø8
100	NYLON	6.0-8.0	65	ø10

4.5-6.0	Series	Ref.
	AV	AV-601
	ST	ST-303, ST-303 A, ST-303 FLAT, ST-303 W, ST-304, ST-304 END, ST-306, ST-306 END, ST-311, ST-335 FLAT

6.0-8.0	Series	Ref.
	ST	ST-333, ST-334 FLAT, ST-353, ST-353 W, ST-354, ST-356, ST-356 FLAT, ST-358,

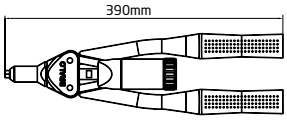

BM-160

ø mm	Aluminium	Steel	Stainless	Copper
4.0	✓	✓	✓	✓
4.8	✓	✓	✓	✓

Rivet gun

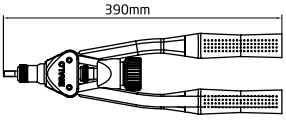

TR-308

ø mm	Aluminium	Steel	Stainless
M-4	✓	✓	✓
M-6	✓	✓	✓
M-8	✓	✓	✓

Rivet gun for riveted nuts

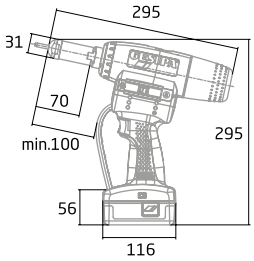

FIREBIRD PRO

ø mm	Aluminium	Steel	Stainless
M-4	✓	✓	✓
M-6	✓	✓	✓
M-8	✓	✓	✓

Automatic rivet gun for riveted nuts

BR-2060

	1

Ref.
FIS VS, FIS MS PRO

Chemical anchor gun

BR-2036

	1

Hammer

BR-2037

1

Torque wrench 20-100 Nm Gedore

BR-2030

	ø
1	30-32
1	45-50
1	58-62

Ø30-32	Series	Ref.
	CC	CC-775 D.30

Ø45-50	Series	Ref.
	CC	CC-775 D.50, CC-735
	ST	ST-314, ST-315

Ø58-60	Series	Ref.
	CC	CC-775 D.60

Hook wrench

BR-2046

	RE
1	40-100

Needle-nose pliers

BR-2033

1

Multi-purpose Allen wrench with hex head

BR-2034

1

Allen Key Set - Short-Head Ball, 1.5-10

BR-2035

1

Allen Key Set - Ball, 1.5-10

BR-2043

1

Bit screwdriver

BR-2044

1

Cordless Screwdriver

BR-2045

1

No. 3 Allen screwdriver bit

BR-2073

1

Special Stainless Steel Drill Bit Set 1-13x0.5

BR-2054

1

Multi spirit level

BR-2041

1

Tool for wedges

BR-2039

1

Roller

Maintenance Guide

Comenza Railing System

We recommend following these cleaning and maintenance guidelines to preserve the finish and ensure the system's durability.

- **Gentle cleaning:** use a soft sponge or cloth with warm water and mild soap. Apply to both aluminium profiles and glass panels.
- **Rinse:** remove any soap residue with a damp cloth or clean water to prevent stains.
- **Drying:** dry with a dry cloth, a microfibre cloth or absorbent paper to remove any droplets and restore the shine.

Steam cleaning can also be used to ensure the best possible results without resorting to chemicals.

What to avoid?

- **Abrasive materials:** avoid using steel wool, rough sponges, metal blades or scrapers, as these may damage the finish.
- **Harsh cleaning products:** do not use acidic cleaners, strong alkaline cleaners, solvents, or bathroom cleaners, as they can damage the surface protection.

Cleaning frequency

- **General use:** monthly cleaning is recommended.
- **Harsh environments:** for coastal and industrial areas, swimming pools or locations with heavy traffic, increase cleaning frequency to remove salt deposits and contaminants.

Specific recommendations for building works and renovations:

- If you are going to perform masonry or painting work after installing the system, protect the railing with plastic sheeting and adhesive tape. Construction dust and splashes of cement or plaster are highly corrosive.
- Proper maintenance is essential to ensure the system's certified useful life.

Cleaning and maintenance of stainless steel

In order to preserve the finish and the integrity of the system.

- **Gentle cleaning:** Use a soft sponge and apply the cleaning product following the provided instructions:

CLEAN+ (500ml)

We recommend using CLEAN+ regularly to keep the surface in the best possible condition, as part of your routine cleaning and to remove fingerprints.

STAIN ZERO (500ml)

STAIN ZERO is recommended for cleaning stubborn stains and rust marks. After application, we recommend cleaning the surface with CLEAN+

- **Rinsing:** Remove any soap residue with a damp cloth or clean water to prevent water spots.
- **Drying:** Wipe with a dry cloth, a microfibre cloth or absorbent paper to remove any droplets and restore the original shine.

What to avoid?

- **Abrasive materials:** avoid using steel wool, rough sponges, metal blades or scrapers, as they can irreversibly damage the protective layer of the anodized or powder-coated finish.
- **Harsh cleaning products:** do not use acidic cleaners, strong alkaline cleaners, solvents, or bathroom cleaners, as they can damage the surface protection.

Cleaning frequency

- **General use:** monthly cleaning is recommended.
- **Harsh environments:** for coastal and industrial areas, swimming pools or locations with heavy traffic, increase cleaning frequency to remove salt deposits and contaminants.

Cleaning recommendations for other types of dirt or contamination

- **Marks of oil or grease.** Use an organic solvent. Afterwards, clean with water and mild soap, rinse with clean water, and dry with a clean cloth.
- **Scratches on satin-brushed finishes.** Polish using nylon pads impregnated with iron-free abrasives. Make sure the pads are made of nylon to prevent iron particles from sticking to the surface.
- **Painting or Graffiti:** They can be cleaned with paint strippers, solvents or alkaline agents. Use a soft-bristled or nylon brush. Avoid using hard scrapers or blades, as these may cause scratches.
- **Splashes of mortar and/or cement.** Apply a solution containing 10–15% phosphoric acid. Apply the lukewarm solution, neutralise it with diluted ammonia, rinse it off with water (preferably deionised) and dry it.

  Where the layer of mortar or cement is less than 2.5 mm thick, use STAIN ZERO.

  Products for removing mortar or diluted hydrochloric acid shall not be used on stainless steel, as they may cause serious damage to it. If they have accidentally been applied to or spilled onto stainless steel, the surface must be rinsed thoroughly with plenty of clean water.
- **Contamination with iron particles caused by contact with tools, structural components and carbon steel scaffolding tubes, as well as by operations carried out in close proximity to the welding, cutting, drilling and grinding of carbon steel.** Iron contamination must be removed immediately, as it would quickly lead to oxidation on the surface of the stainless steel in the presence of moisture.

Glossary

Tools

	Welding tool
	Needle-nose pliers
	Screw
	Screw with hex key
	Centering device
	Double-sided tape
	Cutter
	Tool for wedges
	Hammer-in installation
	Short hex key
	Hex socket wrench
	Impact wrench
	Torque wrench
	Hook wrench
	No. 3 Allen screwdriver bit
	Hex tube wrench
	Pin wrench

	Glue
	Roller
	Adhesive sealant
	Hammer drill

	Satin anodized finish
VARN	Varnish finish
LAsUR	Varnish finish for outdoors
BA	Bright polished

NAT	Natural finish
SATIN	Satin finish
ZINC PLATED	Zinc plated
RAL	Lacquered
AISI-316	Stainless steel AISI-316
	Qualanoad
	Qualicoat

Warning	
	Pieces per box
	Check Table of uses
	LED lighting
	Square symbol
Ø	Diameter
E	Thickness
E*	Compatible reference thickness
G	Glass thickness
L/R	Left/Right
LG	Length
M	Screw metric
QLTY	Material quality
Ref	Reference
RE	Adjustable
	Private use
	Public use
	Pools
	Crowd load areas

Level In	Level-In
Level In+	Level-In+
Slot 180°	SLOT 180°
Level 3D	LEVEL 3D
Level 2D	LEVEL 2D
Slot 360°	SLOT 360°

Legal deposit:
LU 165-2016

All rights reserved. The reproduction of this catalogue, in whole or in part, by any mechanical or electronic means, is prohibited without the publisher's prior written permission.

The technical data shown in this catalogue is for information purposes only; therefore, the actual products may differ slightly from the dimensions and photographs shown.

Comenza reserves the right to make changes and improvements to the products shown in this catalogue whenever it deems appropriate.

www.comenza.com

VERSION - SEPTEMBER 2026

comenza
Railing Passion

Comenza, S.L.U.

Avda Benigno Rivera, 100
Pol. Ind. Ceao, 27003
Lugo - Spain
T +34 982 207 227
F +34 982 209 589

sales@comenza.com
www.comenza.com